NEW SERBIAN ARMAMENTS

CONTENTS NEW SERBIAN ARMAMENTS

CONTENTS

CONTENTS

1 MODULAR COMBAT SYSTEM – RIFLE M19

Modular assault rifle 6,5×38/7,62×39 mm is state of the art weapon adaptable to various combat situations. It combines excellent reliability of the venerable Kalashnjikov mechanism with significantly improved ergonomics good controllability and unprecedented ballistic efficiency provided by new 6,5 mm ammunition. This round has 4 times more energy at 500m than 7,62×39 mm round and 2 times more energy than 5,56×45 mm round. has far better penetration than both of the previously mentioned and provides for accurate firing up to 800m. In order to avoid any logistic problems related to introducing of the new 6,5 mm ammo, barrel may be replaced rapidly with 7,62 mm barell enabling use of widespread 7,62×39 mm.

- Selective fire
- Calibers 7.62×39 mm and 6.5×39 mm
- Quick and simple replacement of the barrel, no tools necessary
- The caliber is changed by just replacing the barrel and the magazine
- All calibers have two different lengths of barrel
- Cold forged barrels
- Gas regulator
- Ambidextrous controls (fire selector, magazine catch, cocking handle)
- Non-reciprocating cocking handle
- Long Picatinny rail
- Handguard with K-holes that enables assembly of accessories
- Fully adjustable, telescopic, side folding stock

TECHNICAL CHARACTERISTICS	
Caliber, mm	7.62×39&6.5×39
Barrel length, mm	415 / 254 mm
Overall length, mm	835 - 910 / 674 - 749 mm
Overall length with stock folded, mm	640 / 479 mm
Weight of the rifle with an empty magazine	3.85 kg
Magazine capacity, rds	30 (7.62×39)/25 (6.5×39)
Operation	Gas operated long piston travel
Locking	Rotating bolt

2 SEMI-AUTOMATIC SNIPER RIFLE SR X20

- Semi-automatic sniper rifle
- Gas operated weapon
- Locking is achieved with rotating bolt
- Cold forged barrel provides exceptional precision
- Robust design provides excellent function and performance on all terrains and in all weather conditions
- Tactical handguards with Picatinny rails and different types of lock holes enable the assembly of a wide range of accessories
- Long Picatinny rail on the receiver cover and handguard
- Muzzle brake with multiple gas dispersing holes over 360° pattern reduces the recoil and muzzle flash
- Gas regulator
- Built-in deflector that directs ejected cartridge cases
- Telescopic folding stock with adjustable cheek pad
- Bipod
- 3-18× Optical sight included in the rifle set

TECHNICAL CHARACTERISTICS	
Caliber, mm	7.62×54R
Magazine capacity, rds	10
Barrel length, mm	560
Overall length, mm	1070-1145
Overall length with stock folded, mm	900
Weight of the rifle with an empty magazine and optical sight, kg	5.16
Type of fire	Semi-automatic
Operation	Gas operated
Locking	Rotating bolt
Maximum effective range, m	1.000

3 SNIPER RIFLE M07 AF

- Bolt action rifle, based on improved Mauser M98 mechanism with short lock time striker
- Cold forged heavy barrel guarantees exceptionally high reliability and precision
- Fully adjustable folding stock
- The receiver and Picatinny rail are made out of one block of material
- Long Picatinny rail on the receiver and over the barrel
- Adjustable trigger mechanism with single trigger
- Mechanical safety has three positions: safety on, safety off and secure position that enables unlocking of the mechanism, but the rifle cannot be triggered
- Thread on the muzzle enables the assembly of masking devices and it is protected with a ring
- Optical sight, bipod and monopod on the stock are included in the standard set of the rifle
- In caliber .338 Lapua Mag the rifle has a muzzle brake as a part of standard equipment

TECHNICAL CHARACTERISTICS		
Caliber, mm	7.6×51 7.6×54R	.338 Lapua Mag
Barrel length, mm	650	650
Overall length / stock folded, mm	1.182/930	1.220/968
Weight of the rifle with an empty magazine, kg	6.91	6.97
Magazine capacity	5	
Type of fire	Single shot	
Operation	Bolt action	
Locking	Rotating bolt	
Maximum effective range, m	1.000	1.400m

4 LONG RANGE PRECISION RIFLE M12 M

- Bolt action rifle
- Heavy barrel provides exceptional precision at long ranges
- Chrome plated barrel bore
- Three-chamber muzzle brake reduces the recoil and facilitates shooting
- Adjustable trigger-pull
- Mechanical safety placed on the trigger guard
- Long Picatinny rail on the receiver and handguard
- Handguard with Picatinny rails at 12 and 6 o'clock and different types of holes for the assembly of accessories
- Adjustable folding stock has buffers that significantly reduce the impact of the weapon recoil
- Adjustable butt spike facilitates prolonged target observation
- Adjustable folding bipod
- Carrying handle that can be disassembled

TECHNICAL CHARACTERISTICS		
Caliber, mm	12.7×108	12.7×99
Barrel length, mm	860	840
Overall length, mm	1.600	1.580
Weight of the rifle with an empty magazine, kg	13.00	12.95
Magazine capacity	5	
Type of fire	Single shot	
Operation	Bolt action	
Locking	Rotating bolt	
Maximum effective range, m	1.600	

5 MACHINE GUN M02 COYOTE (12.7mm OR .50 CAL)

- Automatic fire
- Cold forged barrel with chrome plated bore provides long service life with unaltered ballistic characteristics
- Reliable functioning, on all terrains and in all weather conditions
- The barrel is disassembled quickly and easily, so that in extreme modes of use, it can be cooled quickly or replaced with the spare one
- The machine gun is fed from the ammunition belt placed in an ammunition box, with the capacity of 60 rounds.
- After firing, cartridge cases are ejected forward, which increases the safety of the shooter and the personnel in the vicinity.
- Flash hider on the muzzle disperses gun powder gases and reduces the flash, thus masking the position of the weapon.
- Trigger mechanism that leans onto the stock with buffers provides precise shooting
- Adjustable hight Tripod

TECHNICAL CHARACTERISTICS	
Caliber, mm	12.7×108 12.×99
Barrel length, mm	1100
Length, mm	1970
Weight of the machine gun with an empty magazine, kg	48.8
Capacity of ammunition box, rds	60
Tape of fire	Automatic
Operation	Gas operated
Locking	Sliding breech block
Rate of fire, rds/min	700
Maximum effective range, m	1.500

6 LIGHT MACHINE GUN M84 M

- Automatic fire
- Cold forged barrel provides long service life and durability
- Chrome plated barrel bore
- Exceptional precision at long ranges
- Gas regulator provides flawless functioning in all conditions
- Reliability and durability on all terrains and in all weather conditions
- Feeding is from the ammunition belts with the capacity of 100 or 250 rounds, placed in matching ammunition boxes
- Quick and easy replacement of barrel, no tools necessary
- Picatinny rail on the receiver cover enables the assembly of optical and electronic devices
- Fully adjustable folding stock
- Delivered with bipod or tripod

TECHNICAL CHARACTERISTICS	
Caliber, mm	7.6×54R or 7,62×51 Nato
Barrel length, mm	603
Overall length, mm	1173 - 1243
Length with stock folded, mm	908
Weight, kg	9.3
Capacity of ammunition boxes, rds	100 / 250
Type of fire	Automatic
Operation	Gas operated
Locking	Rotating bolt
Rate of fire, rds/min	700-800
Maximum effective range, m	1.000

7 M05 C1 CARBINE

- Compact design
- Kalashnikov system provides perfect functioning in various terrains and in all weather conditions
- Selectivee fire
- Remarkably balanced weapon with low recoil enables easy control of fire
- Flash hider
- Full length Picatinny rail on the receiver cover
- Two-part polymer handguards with excellent thermal insulation provide comfortable grip
- Picatinny rails on handguards
- Polymer folding stock

TECHNICAL CHARACTERISTICS	
Caliber, mm	7.62×39 or 5,56×45mm
Barrel length, mm	254
Overall length / stock folded, mm	810/565
Weight of the rifle with an empty magazine, kg	3.95
Magazine capacity	30
Type of fire	Semi-automatic and automatic
Operation	Gas operated
Locking	Rotating bolt

8 ASSAULT RIFLES M05 E1, M05 E2, M05 E3

Kalashnikov system provides perfect functioning in various terrains and in all weather conditions

- Used high quality materials contribute to exceptional durability
- Cold forged barrel provides excellent precision
- Automatic and semi-automatic type of fire
- Remarkably balanced weapon with low recoil enables easy control of fire
- Muzzle brake also serves as a flash hider
- Iron sights with tritium tubes enable aiming in the dark as well
- Two-part polymer handguards with excellent thermal insulation provide comfortable grip
- Picatinny rails on handguards
- Polymer folding stock

M05E1 is the basic model, without the possibility to mount an optical sight carrier.

M05E2 has a rail on the left side of the receiver for the assembly of the optical sight carrier. On customer request, optical sight carrier with Picatinny rail can be included in the weapon set.

M05E3 has a Picatinny rail along the receiver.

TECHNICAL CHARACTERISTICS	
Caliber, mm	7.62×39
Barrel length, mm	415
Overall length / stock folded, mm	934/689
Weight of the rifle with an empty magazine, kg	3.92 (M05 E1), 4.00 (M05 E2), 4.09 (M05 E3)
Magazine capacity	30
Type of fire	Semi-automatic and automatic
Operation	Gas operated
Locking	Rotating bolt

9 REVOLVER GRENADE LAUNCHER 40 mm/6 M11

Revolver grenade launcher RBG 40 mm/6 M11 in 40 mm caliber equipped with telescopic folding stock, and red dot sight is versatile assault weapon capable of providing infantry squads or special units with effective fire support against dismounted or entrenched infantry, bunkers and light fortification light armored vehicles up to the range of 600 m with various HE-frag/HEAT highly effective 40mm grenades with different fusses including air bust fuse. Also can be used for battlefield illumination, smoke screening and riot control with non lethal ammunition. It can fire standard 40x46 NATO rounds or improved Serbian 40x46 MV and 40x51 grenades. It is also implemented system in Serbian made RCWS with recoil compensation.

BASIC TACTICAL-TECHNICAL CHARACTERISTICS RHG 40 MM/6 M11	
Barrel length	300 mm
Magazine capacity	6 rounds
Firing type	individual
Triggering system	of double effect
Grenade speed	≤ 78 m/s
Mass without ammunition	≤ 5,9 kg
Length with unfolded	800 mm
Length with folded stock	725 mm
Ammunition type	40×46 mm (NATO-standard)
Firing rate	≥12 rounds/min
Maximum firing distance	375 m-40×46 standard 600 m-40×46MV 800 m-40×51

10 OPTICAL AND REFLEX SIGHTS FOR ASSAULT RIFLES M20 (4×32)/ RS-C

Combination of those two device is principle sighting system for new Serbian army infantry assault weapons family. They are both featured with light aluminum cases, precision mechanics and high grade optics providing for accurate arming. Built in illuminated reticles provides for fast and accurate aiming with 3 calibers of ammunition 5,56, 7,62×39, 6,5×38 practical up to the range of 800 m.They are equipped with an adapter that enables fast and reliable mounting of the sights on the picatinny rail as well as mounting of the reflex sight on the top of the optical sight.

OPTICAL SIGHT M20 (4×32)	
Magnification	4×
Field of view	7°
Exit pupil diameter	6 mm
Exit pupil distance	60 mm
Eyepiece diopter fixed	-0,5 dptr to –1,5 dptr
Resolution	to 15"
Working temperature	from –30°C to +50°C
Reticle illumination	LED
Minimum work autonomy	200h
Dimensions	140×80×75 mm
Mass	≤0,65 kg

Reflex sight RS-C	
Magnification	1x ± 0,1
The adjustment step	1 MOA (3 cm on 100 m)
Reticle illumination (aiming point)	> 6 levels
Parallax	≤ 0,2 dptr
Power source battery type	3V CR2032
The range of sight rectification	± 1°
Mass (including the power source)	130 g
Minimum work autonomy	> 100h
Dimensions	59×52×48 mm
Operating temperature range	-30°C ... 50°C

11 PASSIVE OPTICAL DEVICES SIGHT POS-11 AND MONOCULAR NIGHT VISION MNV-1

Passive optical sight POS – 11 is intended for effective detection of the targets and aiming in low light conditions . The aiming mark brightness can be adjusted by the shooter and has a red luminescence color. The sight can is equipped with an image intensifier tube of generation 3. Recognition distance of a human figure at a brightness of not less than 0.004 lx is 450m.

MONOCULAR NIGHT VISION MNV-1 is intended for observation and movement at night, as well as for aiming and firing at night and in conditions of limited visibility from submachine guns, automatic rifles and other weapons (depending on configuration).

The MNV functions are compatible with optical reflex sights whether mounted on the weapon or on the helmet / head of the shooter.The MNV is compatible with laser target designator and target illuminators operating in the IR spectrum.

POS-11	
Magnification	3,5×
Field of view	12°
Eye relief	35 mm
Exit pupil diameter	7 mm
Levels of reticle brightness	6+2 work mode
Image intensifier tube	Gen 3
Mass	< 1.200 g
Dimensions	185×90×90 mm
Temperature range	-40°C ÷ 50°C
Waterproof	

MONOCULAR NIGHT VISION MNV-1	
Magnification	1×
Field of view	40°
Size of target 1,8×0,5 m	Detection ≥ 200m Recognition ≥ 100m
Image intensifier	Gen 3
Time of autonomous operation	> 24h
Mass MNV	with battery ≤ 0,5 kg with mount ≤ 0,9 kg
Temperature range	-30°C ... +50°C

12 THERMAL IMAGING SIGHT NT-35/NT-75

Thermal Imaging Sight NT-35 is a thermal weapon sight for assault rifles and NT -75 for dedicated machine guns in Serbian Armed Forces. They are based on latest micro bolometer technology and high quality image processing .They can detect heat of targets during day or night, especially in severe conditions such as total darkness, haze, dust, sleet, forest.

FEATURES:

- Pixel pitch 17µm, NETD≤70mK
- 50Hz instant imaging, 3s start-up
- 35 mm lens
- AMOLED SVGA 800×600
- Polarity control (black hot/white hot)

SIGHT	NT-35	NT-75
DETECTOR DATA		
IR Resolution	640×480	640×480
Type	Uncooled FPA	Uncooled FPA
LENS DATA		
FOV/Focal distance	18°×13,3°/35mm	8,3°×6,5°/75mm
Detection distance (human)	1.140 m	2.400 m
Recognition distance (human)	320 m	620 m
Eye relief	27mm (50mm optional)	48mm
Diopter	-5 ~ +5	-6 ~ +4
IMAGE PERFORMANCE		
Display	800×600 OLED	800×600 OLED
Zoom	2×, 4×	2×, 4×
Reticle color	White/Black	White/Black
Battery type	2 pcs CR123 battery	2 pcs 18650 lithium battery
Picattiny rail	MIL-STD 1913	MIL-STD 1913
Operating temperature range	-30° ~ +60°C	-35° ~ +60°C
DIMENSIONS		
LxHxW	156×61×66 mm	252×99×87,5 mm
Mass	<900 g	<1,2 kg

13 REFLEX SIGHT NR-3

NR-3 is designed to replace the standard mechanical sight, providing quick and accurate acquisition of targets in both day and night conditions. Mounting is made fast and simple using a standard pikatinny rail.

TECHNICAL CHARACTERISTICS	
OPTICAL DATA	
System	Passive red dot collimator reflex sight
Magnification	1×
Reticle	2 MOA
Optical coating	Antireflex coating
ELECTRONIC DATA	
Battery type	3V lithium CR-1/3N, 160 mAh
Battery life	1.000 h in day mode 10.000 h in night mode
Dot brightness	3 night + 6 daytime + 1 off
MECHANICAL DATA	
Adjustment	one click 20 mm at 100 m
Mounting	Pikatinny rail (MIL-STD 1913)
Dimensions	111×73×83 mm
Objective diameter	30 mm
Weight	< 300 g
ENVIRONMENTAL DATA	
Operating temperature	-30°C - +60°C
Water resistance	IP68, 5 m (15 ft)

14 WIRELESS VIDEO SIGHT VN-4

VN-4 is an attachable system for both the users' rifle and helmet, providing the user with enhanced viewing prowess and safer operating when on the field. Using the ocular provided, the user can safely observe his target area and accurately engage the target without exposing himself to enemy fire. This is extremely useful in situations with limited cover, in tight spaces and in situations requiring low profile observation.

TECHNICAL CHARACTERISTICS	
RIFLE VIDEO SIGHT	
Magnification	4×
Field of view	140°
Operating mode	IR, IR+
Supply	Rechargeable lithium battery
Autonomy	3 h without IR illuminators 2 h with IR illuminator
HELMET VIDEO SIGHT	
Field of view	140°
Operating mode	IR, IR+
Supply	Rechargeable lithium battery
OCULAR	
Display type	OLED
Dioptric correction	± 4 dptr
Ocular adjustment	In 3 axis

15 NIGHT VISION GOOGLES NVG-14B

NVG-14B is a stereoscopic device designed to provide better visualization in low light environments. The device consists of two independent 3rd generation image enhancers. Using an adjustment mechanism it is possible to set up the device according to the users eye position, providing a natural fit for ease of use.

TECHNICAL CHARACTERISTICS	
Type	3rd generation
Magnification	1×
Angular field of view	40° ± 2°
Focus range	0,25 m - ∞
Diopter adjustment	± 4 dptr
Resolution	lp/mm 57 – 64
Supply voltage	3 V
Auto off	under 40 Lux YES
Low battery indicator	YES
IR-ON indicator	YES
Active period without IR illuminator	40 h
Active period with IR illuminator	20 h
Output pupil diameter	20 mm
Output pupil relief	25 mm
Weight	680 g
Operating resource	10.000 h
Operating temperature range	-20°C - +55°C

16 PROTECTIVE BALLISTIC EQUIPMENT

Ballistic protective equipment kit is intended for the protection of vital body parts (chest and abdomen) from the fragmentation effect of grenades and bombs and bullets fired from automatic rifle guns, guns, automates and revolvers (i.e. level of protection IV according to NIJ standard), as well as for carrying and combat use of all parts of armament and military equipment.

BALLISTIC PROTECTIVE EQUIPMENT COMPRISES:

- Ballistic protective body armor of IIIA level of protection with "MOLE" placement of additional cases and parts,
- Two ballistic protective plates of IV level of protection with "MOLE" placement or retracting into a combat body armor (in three sizes),
- Plate carrier with
- "MOLE" placement of additional cases and parts,
- Case for placing AME parts and combat resources with "MOLE" placement,
- Elbow and knee guards,
- Other equipment.

Body armor - plate carrier is characterized by a high level of ballistic protection, modularity, extended lifecycle and better mobility of the users of the mentioned systems.

17 FAMILY OF ROBOTIC COMBAT VEHICLES "MALI MILOŠ"

Armed armoured unmanned ground platform is a remotely controlled small tracked armoured vehicle intended for support of special and reconnaissance units, especially in anti-terrorist actions in urban environment, including actions in buildings. Complete wireless remote control of all functions of the system is performed through control posts in command control vehicle or from a portable control post.

Electric drive of the vehicles provides silent motion and observation. Steal armour protects the vehicles from small arms fire . It can be used for different missions such as: Combat, Recon, MEDEVAC and logistic (load capacity – 250 kg).

Three versions have been developed: unmanned logistic, lightly armed V1 and heavy armed V2.

Robust tracked suspension provides excellent mobility on all terrains. It is transported in a trailer towed by a light off road vehicle which also contains command and communication consoles & equipment. It also can be transported on various other vehicles or medium helicopters.

PERFORMANCES				
Mobility	vertical slope 30°, lateral slope 25°, vertical obstacle 200 mm, trench width 250 mm			
Maximum weight	550 kg logistic/ 680 kg V1/ 750 kg V2			
Variant		V1	V2	L
	Length	1.725 mm	1.870 mm	1.725 mm
	Width	800 mm	960 mm	770 mm
	Height	950 mm	950 mm	950 mm
Weapons	**V1:** Machine gun 7,62 mm Grenade launcher RBG 40/6 mm and 2× Anti-tank rocket 64mm M80, range 1.000m/400m/500m respectively **V2:** Heavy machine gun and 2× Anti-tank rocket 90 mm M79, range 2.000/1.000 m respectively			
RCWS movement	at traverse 360° (velocity 45°/s) at elevation -10° to 45° (velocity 25°/s)			
System control	Remote wireless – protected communication by encrypted radio communication			
Surveillance-sighting system	Day CCD camera, Night-thermal camera, Laser range finder			

18 UNMANNED GROUND VEHICLE MILOSH ULTRALIGHT (UL)

The UGV Milosh UL is the latest member Milos combat UGV family designed for the needs of special forces optimized for urban, counter-terrorist operations. It is built from light materials with improved suspension providing high mobility and obstacles negotiations in built up environment. It has capability to enter buildings through the standard 800mm wide doors as well as to climb standard escalators in shopping malls, train stations etc. Vehicle has exceptionally small silhouette and quiet electrical drive with the rubber-coated tracks providing for concealed approach to the target/area of interest.

Powerful communication system also provides for and vehicle control and operations in NLOS conditions inside buildings.

Due to its light weight and small dimensions Milosh UL can be transported with various light transport vehicles as well as helicopters. It is controlled with light-weight portable command console.

PERFORMANCES	
Mobility	Maximal vertical slope 35°, maximal lateral slope 30°, maximal vertical obstacle 240mm, maximal trench width 250mm
Maximum weight (kg)	240
RCWS weight (kg)	70
Dimensions L/W/H (mm)	1630/770/810
Weapons	Machine gun 7,62mm and revolver grenade launcher 40/6 M16
System control	Fully remote wireless control Radio communication
Radio control range with	LOS in open space > 3 km LOS in urban areas up to 1,5 km NLOS up to 800 m
Surveillance-sighting system	Day CCD camera, Night-thermal camera, LRF

19 COMBAT MULTI-COPTER "OBAD"


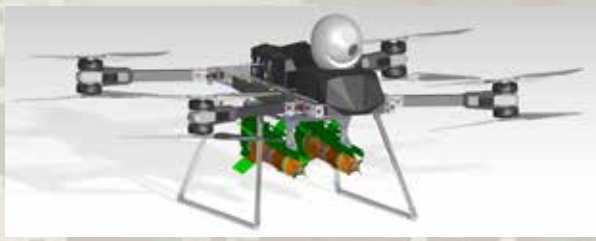

Armed combat multicopter family OBAD is a modular UAS capable of caring 50kg payload and designed for combined operations with other ground and aerial unmanned/robotic systems within MUM-T (manned-unmanned teaming) organized combat units. It is intended for day and night reconnaissance, target acquisition, communication retranslation, static and moving targets engagement, EW missions as well as critical resupply.

Its modern and modular design provides for integration of various payloads in order to complete different combat mission. It could be equipped with:

- Gyro stabilized platform carrying optoelectronic sighting system and unguided AT rockets or small diameter bomb/airdrop mortar shells.
- Two ATM missiles (fixed/rail installation) and optoelectronic sighting system enabling efficient neutralization of heavily armored targets at (for combat drones) very long distances (3km).
- EW/jammer payload
- Carrying harness for bringing critical logistic support on dangerous routs to the first combat line.

OBAD can be operated manually or programmed for autonomous operation, utilizing the systems advanced avionics and precise GNS navigation which provides greater precision accuracy and reliability.

20 ARMED DRONE WITH ROTARY WINGS

The armed drone with rotary wings, is produced in a hexacopter configuration. The aircraft's construction is made of composite materials, primarily carbon fibers and epoxy resin, allowing for a 30-minute flight with a payload of 20 kilograms. The flight can be fully autonomous, and the drone can carry 12 airdrop mortar shells 60mm (HK Krusik M73) that can be accurately dropped one by one, effectively neutralizing various targets both day and night. After releasing the bombs, the aircraft can continue to serve as a reconnaissance vehicle, transmitting information to the rest of the system as it is equipped with necessary camera.

TECHNICAL SPECIFICATIONS	
Power	6 isolated electric motors, each with 6 kW power
Propeller Diameter / Pitch	812.8 mm / 279.4 mm
Payload Mass	20 kg
Energy Source	Rechargeable lithium batteries
Construction Material	Composite (carbon fibers and epoxy resin)
Optimal Engagement Altitude	150 m - 500 m
Armament	12 Airdrop 60mm mortar shells
Safety Mechanisms	Two mechanical pins on the drone fuse
Explosive Filling	TNT
Lethal Radius	10 m
RCWS movement range	Azimuth ± 20 ° / Elevation -45 ° ÷ +5 °

21 ARMED KAMIKAZE DRONE

The armed kamikaze drone with rotary wings is produced in a quadcopter configuration. The aircraft features an extremely simple construction made of composite materials and stands out for its ability to quickly detach the armament, which can be stored and transported separately. This drone can be controlled either through terminal control based on day and night cameras or automatically based on GNSS. It can carry one modified 60mm mortar mine (HK Krusik M73), for precise neutralization of various targets. As a reconnaissance vehicle, the aircraft can transmit information to the rest of the system during flight, as it is equipped with necessary cameras.

TECHNICAL SPECIFICATIONS	
Power	4 electric motors
Construction Material	Composite (carbon fibers and epoxy resin)
Speed	100+ km/h
Range	10+ km
Control	Terminal or automatic based on GNSS
Armament	Airdrop 60mm mortar mine
Safety Mechanisms	Two mechanical pins on the drone fuse
Explosive Filling	TNT
Lethal Radius	10 m

22 THERMOBARIC AIR DROP SHELLS 120 mm

120 mm TB shells with special fuze are intended to be used in bombing raids from armed UAVs. 120 mm TB shell is filled with insensitive thermobaric explosive (PBX) as per MIL-STD-2105B (Immunity to impact of the bullet, fast cook-off resistance). Compared to the standard 120 mm HE shell, the 120 mm TB shell has an improved fragmentation and particularly blast effect. The initiating cartridge and powder charges are not used, and instead of metal pins, 120 mm TB shell is designed with plastic fins. Optionally , 120 mm TB shell can be equiped with Proximity Fuze.

120 mm TB V1

Caliber 120 mm
Length of shell with fuze 610 mm
Mass of mortar shell with fuze 12.650 g
Explosive charge Thermobaric explosive (PBX)
Mass of explosive charge 2.525 g
Shell is assembled with special impact or proximity fuze
Lethal (kill) radius of fragments 20 m
Overpressure at 5 m 0.5 bar
Minimum discarding (release) height (altitude) 50m

120 mm TB V2

Caliber 120 mm
Length of shell with fuze 675 mm
Mass of mortar shell with fuze 13.000 g
Explosive charge Thermobaric explosive (PBX)
Mass of explosive charge 3.600 g
Shell is assembled with special impact or proximity fuze
Lethal (kill) radius of fragments 20+ m
Overpressure at 5 m 0.61 bar
Minimum discarding (release) height (altitude) 50 m

120 mm TB V3

Caliber 120 mm
Length of shell with fuze 675 mm
Mass of mortar shell with fuze 13.000 g
Explosive charge Thermobaric explosive
Mass of explosive charge 4.000 g
Shell is assembled with special impact or proximity fuze
Lethal (kill) radius of fragments 30 m
Overpressure at 5 m 0.67 bar
Minimum discarding (release) height (altitude) 50 m

23 MEDIUM RANGE PEGASUS UAS

The Pegasus is a multi-functional armed UAV system with operational radius of 150 km (with retranslation up to 250 km) intended for intelligence, surveillance and reconnaissance missions, striking ground static or movable targets, target laser designation, artillery fire adjustment, damage effect assessment, etc. System is composed of 3 UAVs with vehicle mounted shelters, ground control station and remote video terminal. UAV is equipped with state of the art stabilized optronic gimbal with HD, thermal and CCD, laser range finder. It can also fired two laser guided missiles with range of 6 km.

PERFORMANCES OF UAV	
Wing span	7.025 m
Length	5.395 m
Max. payload weight	50 kg
Max. takeoff weight	245 kg
Cruising speed	130-150 km/h
Operational altitude	2.000-3.000 m
Flight Duration	6-10 h+
Operating range	150 km+
Takeoff/Landing	autonomous, prepared runway

24 FT-8D LASER GUIDED MISSILE FOR UAVS

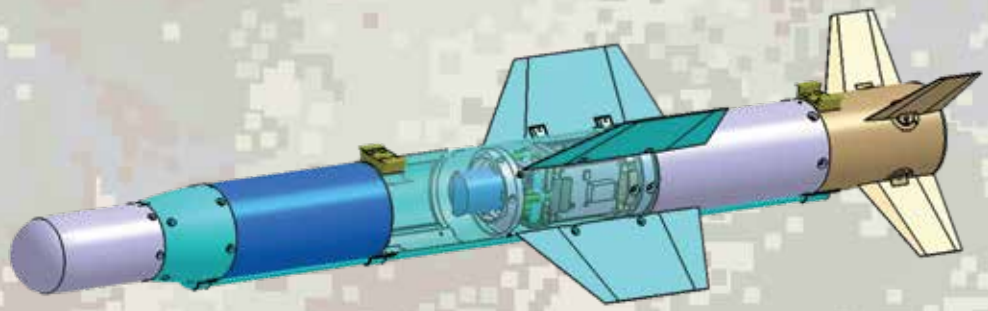

The FT-8D SR is a air to ground missile which uses GPS/INS midcourse guidance and semi-active laser homing terminal guidance to strike both static and moving targets. The FT-8D SR is intended to attack tanks, armor vehicles, boats, lightly fortified objects, etc.

FT-8D SR warhead combines shape-charge and fragmentation effect, which allows it to defeat both soft and hard targets such as dismounted infantry and armored vehicles.

Due to its light weight missile is primarily intended to be used from light tactical UAV`s equipped appropriate opto-electronic gimbal with laser designator. It also can be used with ground based designator.

TECHNICAL CHARACTERISTICS	
Caliber, mm	110
Lenght, mm	230
Weight, kg	4,25
Penetration of RHA, mm	600
Killing radius, m	8

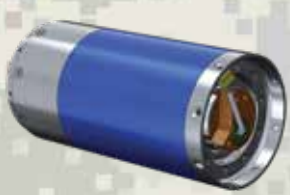

25 GUIDANCE KIT FOR CONVERSION OF MORTAR SHELS INTO HIGH PRECISION AERIAL WEAPON

Guidance kit is intended for conversion of standard, low-cost mortar shells into precision guided weapons. Foldable wings controlled by GPS/INS guidance section, enables target engagement at maximum ranges at 6/9km (60/120mm with launching altitude 3000m) with high accuracy (CEP less than 15 meters).

Due to its low weight (mass 2,5kg with mortar shell), conversion kit for 60 mm mortar shells is suitable for installation on numerous UAVs with limited MTOW.

Converted 120 mm mortar shell (14,5 kg with the shell) with greater terminal effect and lethality, is dedicated for tactical range medium size UAVs as well as for installation on different manned (rotary/fixed wing) aerial platforms. Target coordinates could be set up before flight, or updated during the flight on „target of opportunity" based on data provided by the EO payload installed on unmanned/manned carrier platform. After the releasing guidance is completely autonomous.

TECHNICAL CHARACTERISTICS	For 60mm shell	For 120mm shell
Mass of the kit with mortar round	2.5 kg	14.5 kg
Range (from altitude of 3000 m)	6 km	9 km
Wing span	0.6 m	1 m
Guidance	GPS/INS	
Maximum operating speed	80 m/s	150m/s

26 RAVEN Loitering area denial weapon

This loitering area denial weapon represents a low cost and long range surveillance/strike weapon intended for real time surveillance and strike on a wide range of targets beyond the forward edge of battle area. Intended use: destruction of tanks and other armored vehicles, command posts, artillery fire positions, live force, and other moving or stationary targets, patrol boats and drones.

The ground control station (GCS) is used for launching, entering flight data, drone and TV/IR homing head control. GCS can be mounted on: vehicle/trailer container, off road vehicle (Toyota pickup class) or it could be in the form of portable field kit

TARGET RANGE	
Range	150+ km
Ceiling	2000 m
Start weight	50 kg with payload (35 kg without payload)
Capacity, payload weight	15 kg
Propulsion	launching – solid propellant booster, flight – two-cylinder combustion engine
Length	2,2 m
Wing span	2,4 m
Guidance/navigation system	Inertial, GPS, GLONAS, terminally guided TV/IIR homing head
Approach angle	15° to 75° (Top Attack)

27 SHORT RANGE UAV "VRABAC"

Short range UAV "Vrabac", was designed for day and night reconnaissance and surveillance, border and coastline patrol, forest fire monitoring, traffic monitoring, electric power lines and oil pipelines surveillance. The UAV features fully autonomous guidance with hand-launched or bungee take-off, waypoint flight, target surveillance, camera-guided flight and two landing modes (using air-bag and parachute or a hand-controlled belly landing). The UAV is equipped with a gyrostabilizer camera gimbals with integrated EO and IR cameras. Operational package (for 3 soldiers) consists of: three UAVs, Ground Control Station, Remote Video Terminal, transport equipment, set of tools.

TECHNICAL DATA	
Propulsion	Electric motor
Wing span	2,8 m
Length	1,94 m
Maximum launch weight up to	11 kg
Payload weight up to3 kg	Standard: stabilized day and night gimbal
Operation altitude	300 – 500 m
Maximum speed	90 km/h
Cruise speed	70 km/h
Loiter speed	55 km/h
Endurance	≥ 1 h
Operational radius	≥ 25 km
Armament	4x40 mm small aerial bomblets

SHORT RANGE ARMED UAV

Short range armed UAV is designed for day and night reconnaissance and surveillance, artillery fire control and destruction of light targets. With catapult launch and parachute landing it enables airfields free operations. As a standard payload the UAV is equipped with optoelectronic day and night gimbal and can be armed with 12 light 40mm grenades or two 60mm gliding bombs for attacks from distance.

Operational package consists of: UAVs, Ground Control Station, Remote Video Terminal, Weapons, Catapult, transport equipment and set of tools.

TECHNICAL CHARACTERISTICS	
Power pack	electric
Wing span	≤4 m
MTOW	35 kg
Payload weight up to	11.5 kg
Takeoff and landing	catapult + parachute
Operational altitude	500 m-1500 m
Maximum speed	90+ km/h
Flight endurance	3+ h
Operational radius	50+ km
Armament	12x40mm or 2x60mm kits

29 LOITERING MUNITIONS SYSTEM – OSICA

Loitering munition OSICA is a fully autonomous loitering unmanned aerial systems designed for attack missions (KAMIKAZE). It's a cost-effective high-precision loitering munitions with capability to destroy armored vehicle. UAS is equiped with anti-tank shaped charge warhead. With fixed ultra compact Full-HD camera modul and video processor it's able to detect and full autonomous attack target based on video tracking system.

UAS is designed to be an efficient, economical, mobile and small weight loitering munitions.

The take-off of the LM Osica is fully automated using a lightweight pneumatic catapult launcher.

LM Osica is equipped with flight control computer that developed by Military Tecnical Institute and equipment whose functionality has been checked on UAS Vrabac. Also, LM Osica has the possibility to execute a mission in cooperation or via UAS Vrabac.

TECHNICAL CHARACTERISTICS	
MTOW [kg]	7 kg
Operative speed [km/h]	120
Operative altitude [m]	500
Endurance [min]	>30
Link Range [km]	20
Engine	Electric
Take off	Pneumatic launcher
Warhead weight [kg]	1.5
Penetration of an armored target [mm]	500

One-time
Shaped charge
Intelligence
Combat
Aerial system

30 M-84AS1/2 MAIN BATTLE TANK

M-84AS1/2 in terms of firepower, mobility, protection and situational awareness is among the leading tank desings in the world.

Weapon system includes 125 mm smooth bore L48 main gun with autoloader, coaxial 7,62 machinegun and stabilized RCWS 12,7 mm. Fire control system is composed four channel gunner sight (cooled GEN III thermal imager, SWIR camera, optical channel and eye-safe LRF); stabilized panoramic commander's viewer with GEN III thermal imager, CCD camera and LRF providing for hunter-killer operation; digital biaxial meteorological sensor; stabilized electro-hydraulic servo system which all provides excellent firing accuracy on the move. Stabilized RCWS 12,7 mm, provides tank commander firing from inside the turret, during the day and night, on the move. Commander's situational awareness is additionally improved with all-around video surveillance system and battle management system with digital communication equipment and navigation and orientation system.

Protection is significantly improved by additional armor, and new generation explosive reactive armor modular type which provides protection against modern APFSDS and tandem HEAT rounds. Also laser radiation detection system is installed with automatic smoke pot dischargers. Survivability is additionally improved by automatic fire and fuel explosion extinguishing subsystem, and multispectral camouflage net which significantly reduces vehicle signature in NIR (near-infrared), thermal and radar part of EM spectrum.

Mobility is improved by increased engine power with new compact injection fuel pump, new torsion bars and shock absorbers and new double pin forged tracks with considerable longer service life.

31 MODERNIZED IFV M-80AB1/2

Modernized infantry fighting vehicle BVP M-80AB2 is intended to follow and protect tanks, destroying infantry, armored vehicles, fortifications and other ground and aerial targets and safely transport mechanized infantry squad to the assigned combat position.

Modernization of basic infantry fighting vehicle BVP M-80A includes:

- Fire control system (FCS) provides accurate main gun / grenade launcher coax machinegun and ATGM firing, during day and night at distances up to 5.000 m
- Integrated multichannel day/night gunner's sighting and observation device,
- 30 mm automatic gun (using various 30×173 NATO ammunition, including APFSDS)
- Antitank guided missile system (ATGM) 2T5 (5 km range, radio-guided) 2T (tandem AT, 3 km, wire-guided) and 2F (3 km, thermobaric, wire-guided). SACLOS missile guidance.
- Coaxial machine gun 7,62 mm, with fire regime selector
- Laser radiation detector with automatic 82 mm smoke pot dischargers system
- Automatic grenade launcher 30 mm with independent elevation drive
- Commander's video surveillance system (3.600)
- Commander's thermal imager
- New digital communications system with intercom
- Modern turret electromechanical servo-drive system (elevation and azimuth)
- Modernized running gear with improved performances
- Hydraulically operated rear landing ramp for crew disembarkation and safety seats
- Additional armor provides ballistic protection against modern armor-piercing ammunition: vehicle front against 30 mm caliber.

32

REMOTE CONTROLLED WEAPON STATION RCWS 20 mm / 30 mm

Latest generation of RCWS family, equipped with powerful electric servo drives, powerful armament set, optoelectronic sights and FCS, capable for day/night missions, providing very high level of firepower effective against armoured combat vehicles, fortifications and infantry.

Adequate for 21st century battlefield and capable of destroying contemporary targets on prolonged ranges.

PERFORMANCES	RCWS 20 mm	RCWS 30 mm
Length	3.100 mm	3.850 mm
Width	1.650 mm	1.750mm
Total height	1.300 mm	1.500mm/950mm above the vehicle
Weight	1.350 kg	1.600 kg
Weapons	Cannon 20 mm (60+60 rounds), coaxial machine-gun 7,62 mm (800 rounds), Automatic grenade launcher (“BGA”) 30 mm (29+29 rounds), 2× Launcher with AT missiles	Cannon 30 mm (150 rounds), coaxial machine-gun 7,62 mm (800 rounds), Automatic grenade launcher (“BGA”) 30 mm (29 rounds), 2× Launcher with AT missiles
Cannon field of action	In elevation - 5 / + 45°, in traverse 360°	In elevation - 5 / + 45°, in traverse 360°
Grenade launcher field of action	In elevation - 5 / + 70°, in traverse 360°	In elevation - 5 / + 70°, in traverse 360°
Cannon efficient range	1.500 m	4.000 m
Machinegun efficient range	1.000 m	1.000 m
Grenade launcher efficient range	1.800 m	1.800 m
AT missile efficient range	3.000 m	5.000m
RCWS servo drive speeds	In traverse 50 °/s, in elevation 30 °/s	In traverse 50 °/s, in elevation 35 °/s
Sighting system - primary	TV camera, Gen III thermal imager, laser rangefinder / missile guidance block	TV camera, Gen III thermal imager, laser rangefinder / missile guidance block
Sighting system - secondary	DNS – back up optical sight	DNS – back up optical sight

33 AUTOMATIC CANNON M 12 30mm

M12 is a gas operated belt-fed automatic cannon firing 30*173 NATO standard ammunition designed to be primarily used in IFV turrets/weapon stations. Its features 80 cal long chrome plated barrel and feeding system powered by whole weapon recoil providing for excellent accuracy and very low recoil force.

With various types of available ammunition the cannon can eficiently engange light and medium armored vehicles, light fortification and dismounted infantry as well as aerial targets such is helicopters, aircrafts, cruze-missiles, loitering ammunitions, UAV`s and drones on the range 4km.

TECHNICAL CHARACTERISTICS	
Calibre	30 x 173 mm
Length	3255 mm
Barrel length	2460 mm
Barrel rifling	progressively from 2.5° to 8.5°
Weight	196 kg
Rate of fire	320 to 380 rds./min
Muzzle velocity with HE and practice round M11	1100 m/s
Muzzle velocity with armour piercing tracer round (AP-T) M16	1100 m/s
Muzzle velocity with subcalibar armour piercing tracer round (APFSD-T) M20	1300 m/s

34 LASER DETECTOR AND WARNING SYSTEM - LDWS-2020

LDWS-2020 is a device used for detecting laser irradiation. The system is designed to activate an alarm (with audio and visual feedback) and, if requested, other countermeasures, when it detects that the vehicle it was mounted on has been marked by various types of lasers including laser range finders, laser designators and laser beam riders. The system consists of four detection modules, tasked with capturing both direct and indirect rays, and, optionally, an interior unit used for displaying the direction and type of said laser irradiation.

TECHNICAL CHARACTERISTICS	
DIRECT LASER DETECTION	
Number of receivers	3 per module
Azimuth field of view	360°
Elevation field of view	-5°- +60°
Direction of arrival accuracy	
INDIRECT LASER DETECTION	
Number of receivers	3 per module
Azimuth field of view	360°
Elevation field of view	-20°- -5°
VERTICAL LASER DETECTION	
Cone angle	60°
Number of receivers per module	1
Wavelength range	400 – 1.700 nm
Optional wavelength range	400 – 2.200 nm (optional) 8.000 – 12.000 nm (optional)
False alarm rate	< 1 in 72 hours
Probability of detection	≥ 99 %
Sensitivity	100 W/m2 (direct/indirect) 1 W/m2 (vertical)
Data interface	CAN Bus 500 kb/s
Voltage	18-32 VDC
Current per module	≤ 300 mA @ 24 VDC
Operating temperature	-32°C to +60°C
Module dimensions	127×93×87 mm
Module mass	1,2 kg

35 WEATHER STATION MS-3/D1

MS-3/D1 is a digital weather station, designed to be mounted on a vehicle, with the purpose of providing the user with accurate data related to atmospheric conditions. The sensor is used for measuring the direction and velocity of wind, atmospheric pressure, air temperature and relative air humidity, giving output necessary for various ballistic calculations.

TECHNICAL CHARACTERISTICS	
Wind speed	0-40 m/s
Wind speed accuracy	± 10%
Wind speed resolution	0,1 m/s
Wind direction	0-360°
Wind direction accuracy	± 5°
Wind direction resolution	1°
Air temperature	-35°C - +65°C
Air temperature accuracy	± 4°C
Temperature resolution	0,1°C
Absolute atmospheric pressure	400-1.100 mBar
Pressure accuracy	± 3 mBar
Pressure resolution	1 mBar
Relative air humidity	0-100% RH
Humidity accuracy	± 3% RH
Power	18-40 VDC
Power consumption	5-19 W, 200-800 mA @24 VDC
Operating temperature	-35°C - +65°C
Start-up time	< 40 s
Interface	RS 485
Maximal data cable length	1500 mm
Transmission interval	1 s or 100 ms
Protocol	NMEA; BYT
Connector	Souriau 85107A12-10P50
Height	182 mm
Base diameter	50 mm
Head diameter	73 mm
Weight	0,5 kg
Humidity resolution	1% RH

36 LAZAR 3 MULTIROLE ARMORED VEHICLE 8×8

Lazar 3 is an 8×8 multi role armored combat vehicle designed for various applications and missions. Standard APC version carries 3+9 soldiers and is armed with remotely operated combat modules with 12,7 mm HMG or 30 mm auto cannon.

The power train is accommodated in the front right-side of the vehicle in a protected space completely separated from the crew. The central transfer case transmits the torque to all wheels that have independent suspension and provide for the vehicle's high mobility. All the shafts provide power, while the first two steer the wheels.

Lazar 3 has a highly sophisticated, modular ballistic protection. The hull is made of armored steel with applique spaced armor and spall liners. The applied ballistic protection can be tailored to the specific needs of the user and allows for application of additional state-of-the-art ballistic protection technologies throughout the vehicle service life. The vehicle floor has two levels of anti-mine protection. The crew seating (back to back on blast protected suspended seats) bullet proof glass and gun ports provide for effective observation and personal weapons firing capability. Crew exits through hydraulically operated rear ramp.

TECHNICAL DATA	
Maximum speed	110 km/h
Maximum weight	28 t
Gradient	60%
Side slope	30%
Vertical obstacles	max. 0.55 m
Trench	2 m
Turning radius	11.5 m
Fording	1.6 m

37 LAZAR 3M MULTIROLE ARMORED VEHICLE 8×8

Lazar 3M features innovative add-on front and side armor integrated into standard armored body that greatly improves overall ballistic and anti-mine protection. Vehicle has excellent off road mobility, due to latest generation power pack, automatic transmission and independent suspension all produced by leading western manufactures. Crew have excellent situation awareness due to integrated, day and night visualization system, and battle management system as well as very comfortable air-conditioned working environment.

Lazar 3M infantry fighting vehicle is equipped with RCWS 30mm. It is primarily designed for engagement of enemy unarmored/ lightly armored equipment, firing assets and personnel. Day/night optoelectronic system with LRF enables reconnaissance, surveillance, target recognition and targeting. Stabilized RCWS provides high accuracy for shooting from the move, on various moving and static targets on the long distances.

VEHICLE CHARACTERISTIC	
Maximum speed	110 km/h
Maximum weight	30+ t
Gradient	60%
Side slope	30%
Vertical obstacles max.	0.55 m
Trench	2 m
Turning radius	11.5 m
Fording	1.6 m
Crew	3+9 dismounts

RCWS CHARACTERISTIC	
Armament	automatic cannon 30mm coaxial machine gun 7,62mm
Ammunition capacity (rds)	30 mm - 300 (200 HE +100 AP-T) 7,62mm-1000
Rate of fire (30mm, rds/min)	200 - 550
Optoelectronic sighting system	CCD, IR camera and LRF, ballistic computer, auto tracker
Efficient range 30мм/7,62mm	4 km / 1 km
Electrical two axis stabilized turret drive	
Laying angle in elevation/azimuth :	-10° to +60°/360°

38 LAZANSKI INFANTRY FIGHTING VEHICLE 8X8 WITH 57 MM RCWS

The vehicle Lazanski 8x8 is modern heavy armored vehicle. The integration of world class heavy duty components, special materials and technology lead to development of vehicle capable of competing with the very top producers in the world. Lazanski 8x8 provides the ultimate capabilities considering max gross weight of up to 36t along with powerful 711 Hp turbocharged engine. The extremely robust and powerful vehicle serves as a strong multipurpose platform for range of operations.

The suspension and transmission systems (specially developed for Lazanski 8x8) in combination with Height Management System, provide optimal capabilities of upgrading ballistic protection to levels 5 and 6, with a significant payload capacity for heavy RCWS or turret (installment of the weapon stations of the largest calibers). Mine protection is declared and tested for Stanag level 4, and the seats are specially adapted for shock absorbent. Vehicle is equiped with INS and BMS (battle management system) as well as modern air conditioning and CBRN protection system.

TECHNICAL CHARACTERISTICS OF THE VEHICLE	
Gross vehicle weight	26 t to 36 t depending on configuration
Dimension L/W/H	8 / 3,2 / 2,6 м
Seating capacity	Up to 13 soldiers
Engine	CATTERPILLAR C13 711 кс
Transmission	Automatic 6 speed Allison 4000SP
Mine protection	Stanag level 4a and 4b
Ballistic protection	STANAG level 4 STANAG level 5 and 6 – in development
Improved Crew survivability	Special antiblast seats for complete crew members
Armament	RCWS - 57mm automatic gun And coaxial 7.62mm machine-gun

39 ARMOURED TROOP TRANSPORTER – MRAP M20

MRAP (Mine resistant ambush protected) troop transporter M20 is designed with V-shaped hull and underbelly anti mine protection to withstand the effect of a mine explosion (STANAG 4569 at 3A/3B level).

Ballistic protection on all sides of vehicle (basic and applique armour) provides crew protection against heavy machineguns and artillery shell fragmentation up to Level 4 (STANAG 4569). MRAP M20 can carry up to 15 soldiers: a driver, a commander, a gunner and dismount team of 12 soldiers who are typically manning crew served infantry weapons (mortars, automatic grenade launchers, ATGM systems, machine guns, long range snipers). Due to very large both internal space and external cargo boxes all of the mentioned weapons and ammunitions for the fire sections are also carried. Also, vehicle could be equipped with various additional tools and assets such as combat dozer blade (CDB) at the front end, which has multiple purposes (trench digging, plow for anti-personal mines, removal of obstruction object, etc) as well as additional weapon mounts on the roof , etc.

As a standard equipment vehicle is armed with protected modular gun mount capable of caring 12,7 or 7,62 mm machine guns, 30 mm automatic grenade launchers or ATGM. Optionally it can be equipped with 7,62/40mm or 12,7mm RCWS or large caliber weapon mounts such us 120mm mortars.

Vehicle has enhanced mobility provided by 6x6 off road truck chassis, CITS system, six-speed automatic gearbox and two-speed differential drive distributor, equipped with a powerful diesel engine.

Foldable seats are safely attached to the vehicle roof, efficiently absorbing shocks and vibrations via rails and springs system, providing increased ride comfort.

Crew space is equipped with modern FVC (filter ventilation climatic) system and advanced fire-extinguishing system.

PERFORMANCES	
Gross weight	25.000 kg
Length	7.550 mm
Width	2.520 mm
Height (without armament)	2.600 mm
Max. speed	110 km/h
Clearance	380 mm

40 BOV KIV M-16 VEHICLE FAMILY

BOV KIV M-16 is advanced family of armoured combat vehicles. It is a lightweight, high-performance, independent multi-role four-wheel drive, versatile and adaptable platform.

BOV KIV M-16 is currently offered in four variants: artillery battalion C2, artillery battery C2, infantry battalion C2 and Recce team leader vehicle.

Vehicle has basic and add-on armour with ballistic protection: front side level 4 STANAG 4569, lateral sides level 3 STANAG 4569. The vehicle also has counter-mine protection.

BOV KIV artillery battalion and artillery battery C2 versions are operating jointly with battery/battalion level command post (UPAOS) and they provide full target observation, fire correction and complete fire control on battery/battalion level.

BOV KIV infantry battalion C2 is equipped with built-in communication system allowing real-time encrypted voice and data exchange .

BOV KIV recce team leader vehicle is advanced intelligence, surveillance, target acquisition and reconnaissance (ISTAR) asset equipped with multi-sensor reconnaissance platform MIP-3 operational day and night up to the ranges of 20km.

BOV KIV M-16 vehicle family can easily adapt to a wide range of combat operations due to standard equipment set which consists of:

- RCWS 7,62/40 mm (alternatively 12,7 mm) with grenade launcher
- Ballistic and land-mine protection
- C2 computers and radio sets (2 × VHF and 1 x HF)
- Automatic fire extinguishing system and A/C
- Night driving system with thermal and CCD TV cameras

Auxiliary diesel generator providing electrical power supply for integrated systems with main vehicle engine shut down.

41 ARMOURED PERSONNEL CARRIER BOV OT 4×4 M-21

Armoured personnel carrier BOV OT is designed to safely transport infantry unit up to 10 soldiers: a driver, a commander, and dismount team of 8 soldiers.

Vehicle is based on a wheeled steel monocook body with two side doors. The upper structure is equipped with large front bulletproof glass windshields and six protected gun ports giving the crew excellent visibility and capability to accurately open fire from inside of the vehicle.

Basic steel amour in combination with add-on composite armour provides protection against large calibers infantry munition up to 12,7 mm (all sides). Also vehicle is equipped with anti mine protection.

BOV OT is a lightweight, multi-role, four-wheel drive vehicle with a high mobility due to a powerful turbo charged diesel engine, automatic gearbox, CITS, run flat tires and with a gross weight up to 15 t.

It is equipped with stabilized RCWS 12,7 mm remote-controlled weapon station with a day/night FCS.

Vehicle is equipped with night drive/visualization system as well as FVC (filter ventilation climatic) system and advanced fire-extinguishing system.

It can also be equipped for a variety of different command and combat missions.

42 MOBILE ARMOURED ANTITANK SYSTEM - POLO M83M

Semi-automatic Launching and Guidance System for ATGM 2T5 and ATGMs MALYUTKA (Malyutka 9M14P1 and improved Malyutka 2T and Malyutka 2F) is intended for integration on the antitank armoured combat vehicles as well as other platforms which are armed with Malyutka missiles.

System consists of six rail launchers, thermal imager sight, back-up optical sight, and guidance block all housed within an armoured turret/RCWS.

It can detect and destroy MBT's and other armoured combat vehicles or fortified positions day/night at the range of 5 km with a ATGM using powerful tandem HEAT or thermobaric warhead.

SACLOS system guides Malyutka 2T and Malyutka 2F missiles by wire, or ATGM 2T5 missile by RF link.

System automatically recognizes what type of missile is on the selected launcher and any combination of the missiles (up to six) can be arranged for combat.

PERFORMANCES	
Penetration	1.000 mm RHA after ERA (2TS) 800 mm RHA after ERA (2T)
Maximum guidance range 2T5/Malyutka	5.000/3.000 m
Minimum guidance range 2T5/Malyutka	750/500 m
Guidance	Semiautomatic (SACLOS)
Command link to the missile 2T5/ Malyutka	RF/wired
Antenna beam-width 3dB	70º × 70º
Tracking sensors	WFOV and NFOV CCD camera
Turret servo drive	electrical / mechanical back up
Night sight	Gen III thermal imager
Day sight	High sensitivity CCD camera
Azimuth range	360°
Elevation range	-5° ÷ +10°
Power supply	24V
Operating temperature range	-30 °C ÷ +50 °C
Guided missiles	ATGM 2T5, Malyutka 9C14P1, Malyutka 2T and Malyutka 2F

43 GUIDED MISSILE MALYUTKA 2T

TECHNICAL CHARACTERISTICS	
Maximum flight distance the missile can be guided to	3.000 m
Minimum firing distance	500 m
Minimum firing distance in PA regime	400 m
Penetration of warhead after ERA	750 mm
Mean flight velocity	120 m/s
Caliber	125 mm
Length	1.025 mm
Wing span	393 mm
Transverse dimensions of missile with folded wings	185×185 mm
Weight	12,6 kg
Guiding system	manual, by sending command signals through conductors, by the three-point method or semi-automatic, by the two-point method

44 GUIDED MISSILE MALYUTKA 2F

TECHNICAL CHARACTERISTICS	
Maximum flight distance the missile can be guided to	3.000 m
Minimum firing distance	500 m
Minimum firing distance in PA regime	400 m
Overpressure of warhead at 7m open space	≥0,3 bar
Mean flight velocity	120 m/s
Caliber	125 mm
Length	866 mm
Wing span	393 mm
Transverse dimensions of missile with folded wings	185×185 mm
Weight	12,3 kg
Guiding system	manual, by sending command signals through conductors, by the three-point method or semi-automatic, by the two-point method

45 ANTI TANK GUIDED MISSILE 2T5

Maximum flight distance the missile can be guided to	5.000 m
Minimum firing distance	750 m
Penetretion of warhead after ERA	≥ 1.000 mm
Mean flight velocity	200 m/s
Caliber	145 mm
Warhead caliber	142 mm
Warhad	tandem - HEAT
Length	1.700 mm
Wing span	393 mm
Rocket mass	28 kg
Max flight time	≤ 25 s
Guiding system	semi-automatic, by radio signal
Tracer	pyrotechnic
Electric charge	thermal battery
Minimum operating time of thermal battery	30 s
Firing probability from POL M83	≥80 %

46 ANTI TANK MISSILE SPIDER

SPIDER is Non Line Of Sight (NLOS) fiber optic guided "man in the loop" anti-tank missile, with an imaging infrared seeker for terminal guidance.

The missile uses a tandem warhead – two shaped charges, a precursor warhead to detonate any explosive reactive armor and a primary warhead to penetrate the underlying armor. The SPIDER missile can penetrate 1000 mm RHA (rolled homogeneous armor) after ERA.

Maximum range	9.000 m
Minimum range	500 m
Direct fire possibilities – fire and forget	up to 3.000 m
Indirect fire possibilities – NLOS	2.000 m-9.000 m
Terminal guidance	Imaging Infra-Red homing head/ TV homing head
Mid curse guidance	INS/GPS
Maximum time of flight	55s
Missile caliber	145 mm
Missile length	1.935 mm
Missile mass	43kg
Launching platform	Land vehicle/Helicopter
Readiness time	<30 s
Penetration	1000 mm+ RHA
Probability of hit – stationary target (excluding operator error)	90%
Probability of hit – moving target (excluding operator error)	90%
Temperature range	-30°C to +50°C
Life span	10 years

47 MULTIROLE ARMORED TACTICAL VEHICLE 4×4 MILOSH

The armored multirole tactical vehicle, with 4×4 drive – Milosh belongs to the category of modern armored vehicles intended for the performance of wide range of missions in the activities of police and armed forces. The vehicle is based on monocoque steal hull with applique spaced armor. It is powered by 300 HP turbo charge diesel engine with automatic transmission and equipped with independent suspension system, which ensures high mobility in any terrain and weather conditions with the maximum combat weight exceeding 14 tons. The vehicle can be used for: patrol missions, reconnaissance missions, as a command vehicle, for transportation and support to the units for special operations, in anti-guerrilla, anti-terrorism and anti-tank operations, for the border and territory control, etc.

TECHNICAL DATA	
Maximum speed	110 km/h
Crew	2+6
Gradient	60%
Side slope	30%
Vertical obstacle	0.5 m
Trenching	0.8 m
Turning radius	8 m
Fording	0.9 m

Vehicle can be equipped with various weapon systems such as 12,7 RCWS, Gatling M134D, a 7.62 mm NATO machine gun with rotating barrels, which is characterized by a very high rate of fire - 3,000 rounds per minute. As a standard, vehicle is equipped with air conditioner automatic fire suppression system, NBC system, rear and forward driving day/night cameras, 4 side doors and hydraulically operated rear ramp for crew disembarkation.

48 MULTIROLE ARMORED TACTICAL VEHICLE MILOSH 2

Milosh 2 is latest representative of Milosh vehicles family. Extended version could carry 10 soldiers (compared with basic version with 8 member's crew). Also improved independent suspension system is implemented in line with most modern European IFV. Beside different operationally proven subsystems installed on previous version, fire power of Milosh 2 is significantly increased with implementation of RCWS equipped with automatic 20mm canon, 30mm automatic grenade launcher, advanced day/night optoelectronic sensors and fire control system. RCWS is also equipped with two launcher of SACLOS ATGM 5+km range with tandem warhead, capable to penetrate modern MBT protected with ERA. Implementation of RCWS increased combat effectiveness and range of the missions that vehicle could support.

TECHNICAL DATA	
Type	Armored wheeled vehicle, with 4 side doors, hydraulic rear ramp with door incorporated, and 2 roof hatches.
Drive mode	4x4
Length, overal (incl. winch)	6.5 m
Width (excl. side rear view mirrors)	2.61 m
Height, to the roof panel (load-18 t)	cc. 2.38 m
Interaxle spacing	3.7 m
Wheelbase	2.14 m
Max. weight	18 t
Number of seats	10
Ballistic protection	Level 3 as per STANAG 4569
Anti-mine protection	Level 2a and 2b as per STANAG 4569
Engine type	4-stroke diesel, water cooled, with turbo-charger, intercooler and ECM unit
RCWS	20 mm automatic cannon automatic grenade launcher 30mm coaxial machine gun 7,62mm 2 x ATGM 5+km range 6 x smoke pot launcher electric servo drive azimuth/elevation

49 ZASTAVA NTV - All Terrain Vehicle 4x4

Zastava NTV (New Terrain Vehicle) is all-terrain vehicle designed by the Military Techical Institute and Zastava Trucks and manufactured by Zastava TERVO. It's driven by the turbo diesel engine (Cummins ISF 2.8) with automatic gearbox and hydraulic ABS braking system with electronic distribution of breaking forces and independent suspension system.

Vehicle with maximum loaded mass of 5,4 t, made in three versions: with trunk (1+2 seats), extended cabin (1+4 seats) and with the extended cabin (1+8 seats).

TECHNICAL CHARACTERISTICS

- Independent suspension.
- Maximum speed on asphalt: 110 km/h.
- Maximum hill climb: 60%.
- Ground clearance: 260 mm.
- Up gradable additional armor.
- Length: max 5.100 mm/5.700 mm (long cabin).
- Width: max 2.200 mm.
- Height: 2.500 mm.

Due to its modular design vehicle is suitable for infantry and police forces, and could be equipped as ambulance, fire-fighter vehicle, workshop, command and control, communications, etc. Various subsystem such as EW, SHORAD, etc could be also installed.

Length: max 5.100 mm/5.700 mm long cabin
Width: max 2.200 mm
Height: 2500 mm (without RFCS 12.7 mm)

MNTV

The latest member of NTV vehicles family based on semi closed armor steel welded body. Vehicle is suitable for reconnaissance, anti-terrorist and Special Forces units and infantry transportation characterized with impressive off-road characteristics. Vehicle has possibilities for up-armoring: instaltion of armored door and ballistic glass windshields and armored seats.
Modular design provides for various armament or equipment installations to fit specific missions

Basic armamanet is top mounted 12,7mm HMG in and open gun mount and side mounted 7,62 machine gun. Vehicle allows installation of different weapon system (Gatling gun, 30/40mm AGL, ATM, et) as well as integration of various opto-electronic surveillance/sighting systems.

TECHNICAL CHARACTERISTICS	
Engine	Cummins ISF 3.8
Gearbox	Alisson, automatic, 6 speed
Transport capacity troops	3+6
Ballistic protection (STANAG 4569)	Level 1 basic
Anti mine protection (STANAG 4569)	1a and 1b
Maximum loaded mass	7 T

51 FAP VEHICLES FAMILY

Heavy duty all-terrain vehicles with implemented latest automotive technologies based on Mercedes Benz design, covering all logistic and heavy transport needs for various specialties of the Serbian Armed Forces.

FAP chassis serve as reliable bases for a various new developed armament projects, with gross weight from 10 to 40 t. Vehicles are produced with two, three or four axles, at 4×4, 6×6, and 8×8 wheel drive configuration, powered with Euro 3 to Euro 5 engines, manufactured by MB, Cummins and MAN.

FAP chassis are traditionally used as off-road heavy duty vehicles for logistics purpose. Nevertheless, based on FAP chassis many special purpose vehicles have been developed, such as: tractor truck for heavy equipment trailer, dumper truck, hook loader with roll-on/roll-off capability and various container transport trucks. Transport trucks for mission specific load are produced with task-tailored containers for command post, mobile communication hub, unmanned aerial systems, etc.

TECHNICAL DATA	1118 BS/AV 4×4	2228 BS/AV 6×6	3240 BS/AV 8×8
Basic vehicle weight	11.400	18.400	24.300
Useful payload weight	4.000	7.000	15.000
Power	I30 KW (I74 KS)	205 kW (278 KS)	295 kW (401 KS)
Clutch	G F395	GF 395	MFZ 430
Transwer case	STEYR ZF VG 750	ZF STEYR 1.600/396	MAN 252
Gearbox	FAP 6 MS 80-P 98	ZF9S109	ZF16S221
Steering	PPT 5042	PPT 5045	PPT 5045
Top speed	80 km/h	95 km/h	95 km/h
Max. climbing ability	60%	60%	60%

52

NORA-B52 M21
Self-propelled gun-howitzer 155 mm

NORA-B52 M21 155 mm, armored self-propelled gun-howitzer with high level of automatization.

It can be used on all types of ground, in all climatic-mechanic conditions, in all visibility conditions, day and night, within the temperature range from - 25°C to + 55°C, operation is ensured in case of main drive failure by integration of APU and manual hydraulic controls.

System is equipped with 52 cal barrel length 155 mm main weapon, back up coaxial 20 mm automatic cannon and 12,7 mm machine gun mount for close protection; hydraulically operated 4 resting spades for stabilization; automatic hydraulic servo drive with control electronics and backup manual devices for all function, driven by main truck engine as well as built in APU; FCS based on high precision INS, GPS based North finder, ballistic computer and digital radio communication system with intercom with back up classical artillery dial up sight and direct fire sight; armored acclimatized crew cabins (separated for driver/loader

and gunner/commander) with humidity control system for crew compartments and ammunition; automatic gun loading and ammunition handling system for both projectiles and gun powder charges; automatic fire extinguishing system.

Weapon can engage targets through battery level fire control system or independently: in the automatic operation mode (automatic gun laying and automatic loading of both projectile and powder charges), in the semi-automatic operation mode, in the classical-manual operation mode with dial up sights. Also weapon can engage in direct firing mode important static (bunkers, entrancements) or moving targets (tanks, ships) due to fast hydraulical servo drive, direct firing FCS and uninterrupted main firing sector to the rear in all elevation (-5° to 65°)

AMMUNITION - ALL NATO BALLISTIC MOU AMMO, 23L CHAMBER/52CAL BARREL LENGTH, ALSO CAPABLE OF FIRING OF LASER GUIDED AND COURSE CORRECTION AMMUNITION	
Rate of fire /MRSI	4 rds/min/3 rds simultaneous impact
Max. Range with HE 155 mm ERFB-BT	32.4 km
Max. Range with HE 155 mm ERFB-BB	41.1 km
Max. Range with HE 155 mm VLAP	53 km
ON BOARD AMMUNITION	12 in autoloader + 24 in stowage
Field of action in elevation	-5° to 65° rearwards, +20° to +65° to the front
Field of action in traverse (with max. charge)	±30° rearwards, ±25° to the front
Rate of traverse/elevation	6/8 ° per sec
Auxiliary weapons	20 mm autocannon,12.7 mm MG, 6 Smoke launchers
Crew members	4-5
Crew protection level (STANAG 4569)	level 2
Deployment/redeployment time	90/60 sec
Gross vehicle weight	39 t
Wheel formula	8×8
Maximum road speed	95 km/h
Road autonomy	650 km

53 NORA NG – PERUN

This cutting-edge artillery weapon of the Serbian defense industry is the most powerful, fully automated fire support artillery weapon in cal. 155mm with a high level of autonomy. The system was made through an integration of a 155mm remotely control weapon module on an 8x8 chassis. The weapon module is controlled from the vehicle cabin and, owing to its characteristics. The weapon module is built around a 155mm reinforced barrel assembly that is JBMOU-compliant (Joint Ballistics Memorandum Of Understanding). The barrel is 52 calibers long, with powder chamber of 23 liters. The most important component of the weapon module is a fully automatic loader with 30 projectiles and propellant charges, featuring high rate. Additional 6 rounds are accommodated on the platform for reloading, so the combat set comprises a total of 36 rounds.

System is equipped high precision INS, intercom, digital communication, command and control electronics for integration in battery FCS, fully automatically operated resting spades and turret servo drive, all providing for "shoot and scoot" operations with 60 sec from stopping to fire opening and 30 sec for fire position leaving after fire mission executions. The weapon can fire MRSI fire missions up to 4 RDS. Self-protection is provided by means of passive ballistic protection and two back up weapons i.e.: turreted 12,7mm machine gun and 20mm auto cannon slaved to the main gun.

PERFORMANCES	
Combat weight	< 40 t
Length in marching position	10.5 m
Width in marching position	2.62 m
Height in marching position	3.9 m
Barrel length	52 caliber
Powder chamber volume	23 liters
Range with ERFB projectile	32.5 km
Range with ERFB BB projectile	41.5 km
Range with VLAP projectile	52 km
Ammunition compatibility	All types of 155 mm ammunition
MRSI capability	3 rounds at 30 km
Loading	Fully automatic, with back-up manual mode
Crew number	4
Weapon ammunition set	30 in the automatic loader + 6 on the vehicle
Field of action in traverse	± 30º
In elevation from	-5° to +65°

54

M19 – CC 155MM ERFB-BB PROJECTILE WITH COURSE CORRECTION FUSE

M-19 CC 155mm ERFB-BB is a HE projectile with aerodynamically improved shape and attached base bleed unit for increased range. It is compatible with howitzers complying to NATO ballistic MOU standard. By using of thermobaric explosive filing it has increased target effectiveness and greatly improved accuracy due to high precision machining and course correction fuse especially at the ranges of 30 – 40 km.

Course Correction Fuse provide for CEP smaller than 30m regardless of the range. It uses GPS/INS guidance and moving canards to steer the projectile. It is powered by thermal battery and reduces the range by no more than 5%.

TECHNICAL CHARACTERISTICS	
Fuse	
Weight, kg	2,3
Lenght, mm	315
Operating temperature	-30°C – +50°C
Storage temperature	-40°C – +60°C
Safety distance, m	min. 60
Reliability	min. 92%
Projectile M19	
Caliber, mm	155
Weight w/o fuse, kg	46,3
Lenght w/o fuse, mm	840
Explosive charge weight, kg	10,0
Base-bleed grain weight, kg	1,1
Maximum range with standard fuse, km	40

55 NORA SG – 60 CAL ULTRA LONG RANGE

NORA SG ULR is a project based on extended limits of all applicable technologies in both weapon and ammunition design and production. NORA SG ULR will extend maximum range of current artillery from 40 up to 70+ km. It will be equipped with reinforced 60-caliber barrel. This range is achieved by increasing the gun powder chamber volume (capable of using new generation gun powder charges) and barrel length both resulting in increased muzzle velocity as well as by using new projectiles with improved ballistic performance.

Projectile types included in the project are as follows

- VLAP (Very Long Artillery Projectile)
- HEFSDS (High Explosive Fin-Stabilized Discarding Sabot) Projectile

Both projectile types will have similar warhead size and increased effectiveness due to novel implemented explosives and killing mechanism in burst and deep penetration modes. In order to achieve required long range accuracy both projectile types will be equipped with GPS/INS guidance and potentially with terminal seeker. Ammunition system will use modular combustible gun powder charges.

The main gun is placed in the protected unmanned weapon station remotely operated from the protected crew cabin. The system is integrated on the multi-axel, high mobility truck chassis and equipped with a range of subsystem which are providing full level of automatization of all functions, from stabilization spade deployment, gun orientation, loading and firing, with back up manual mechanisms. In order to provide long range precision strike, the system will be equipped with command, control and communication , ballistic&mission planning calculation subsystems and capable to receive and process target geo location data acquired from long range reconnaissance assets such as UAVs.

56 MODERNIZED SELF-PROPELLED HOWITZER "GVOZDIKA" 122 mm 2S1S

Modernized Self-propelled howitzer 122 mm 2S1S is a modern artillery fire-support weapon mounted on the armoured amphibious tracked chassis with excellent cross-country mobility.

Following subsystems are integrated/ improvements achieved :

- Fire Control System (FCS) with INS, computer and software subsystem: higher speed of target setting and rapidly decreased preparation time for first round - preparation time for firing/change position after firing is 20 sec. Ballistic computer enables Multiple Rounds Simultaneous Impact (MRSI) firing technique which multiplies effectiveness of artillery weapon
- radio communication subsystem: transmission of digital high speed data (firing element, position, condition) between modernized 2S1 and battery command post
- commander's and driver's visualization subsystem: enables safe driving day/night and in poor visibility condition as well as improved situational awareness
- extended range ammunition: up to 40% bigger range with new projectile type, increased lethality with new EBT explosive charge (larger covered area) and efficiency against enemy's manpower in the open space and in trenches with new proximity fuses
- self-protection system, 7.62 machine gun: improving of crew safety, possibility of rapid response to urgent threat (ambush)
- Fire Fighting Systems (FFS) and heating and air-conditioning subsystem.

Implementation of all modernized subsystems did not affect amphibious characteristics of original vehicle and this ability is fully preserved.

Modernized command-armored tracked vehicle is advanced battery/battalion command post for self-propelled howitzers (2S1 Gvozdika).

Command post provides preparation of initial firing elements and fire correction, as well as data and firing command transmission to artillery battery, which significantly decreases unit's reaction time in combat.

Apart from C2 hardware/software and RCWS 7,62/40 mm, modernized command post uses as "building blocks" the same subsystems as modernized 2S1.

57 SH-5 ARMORED TRUCK-MOUNTED HOWITZER, 105L33 mm

Self-propelled truck-mounted howitzer is a modern fire support weapon, particularly intended for modern joint combat units and rapid deployment forces, highly integrated at brigade, regiment and battalion level, intended for rapid response to challenges of modern digital battlefield, characterized by wide range of tactical scenarios of low and high intensity conflicts, including large anti-terrorist and anti-guerrilla operations.

PERFORMANCES	
Length	6.850 mm
Width	2.300/4.250 mm
Height	3.150 mm
Weight, fully loaded	12.000 kg
Combat set	44
Loading system	Manual
Rate of fire, max.	6-8 rds/min
Vehicle autonomy	450 km
Barrel length	3.500 mm
Barrel life	7.500 rounds with the standard round (HE M1)
Range	18.5km (with HE-ER BT round)
Ammunition	all types of 105 mm NATO ammunition

58 ARTILLERY MEDIUM/BIG CALIBER & TANK AMMUNITION

Artillery medium/big caliber and tank ammunition designed and Manufactured in Serbia is based on the latest production technology for all the accompanying components such as gunpowder/propellant; explosives (hexogen, octogen, PBX for HEAT, thermobaric and Extended blast charges); advanced killing mechanism of improved efficiency with prefragmented shells and smart fuses based on ruggedized electronic technologies and sensors. All our ammunition is produced and tested in accordance with the latest NATO and applicable Russian/Soviet standards and has proven its high quality, safety and effectiveness in hardest possible weather and terrain conditions in numerous conflicts round the globe.

We are Producing medium caliber ammunition for airborne, air defense as well as land platform mounted automatic cannons as well as grenade launchers in following calibers: 20, 23, 30, 37, 40, 57mm in both Nato and Russian standards, with all types of projectiles TP, HE, HE-T, AP, AP-T, APDS and APFSDS with vriety of smart fuses including proximity, multi mode and airburst fuses thus greatly increasing ammo effectiveness against different airborne and surface targets including drones and defiladed infantry.

In area of big caliber artillery ammunition Serbian industry is manufacturing ammunition for cannons and howitzers in both NATO and Russian standards in the following calibers: 76, 105, 122, 130, 152 and 155 mm with all types of projectiles (illuminating, smoke, HE, HEER, HE-ERFB-BT, HE-ERFB-BB, VLAP) latest generation of extended range ammunition equipped with new modular gunpowder charges, improved lethality with new more efficient explosive mixtures and new generation of electronic-smart fuses Serbian ammunition is manufactured in accordance with most demanding.

We are manufacturing standard as well as new generation of improved tank cannon ammunition for 100mm and 125mm guns, including APFSDS projectiles with long rod tungsten penetrators capable of defeating 550mmRHA at 2000m, HEAT warheads capable of penetrating 1000 + mm RHA and prefragmented steel ball airburst projectiles extremely effective against dismounted infantry or even helicopters.

40 mm ×51

40 L70 PFHE

155 mm ERFB -BB

HEAT Warhead

125 mm Steel ball airburst

59 MULTIPLE LAUNCH ROCKET SYSTEM "MORAVA"

Multiple Launch Rocket System "Morava" is a light modular artillery system intended for fire support.

Main characteristics:

- Automatized positioning and aiming by INS and GPS;
- Digital control of traverse and elevation motion;
- Modular / multi-calibre (for different calibres and for different warheads)
- Interchangeable launching module (pod) for single use or reuse
- Independent combat mission;
- Automatic reception of firing elements from the universal mobile artillery computer station
- Independent firing elements computation on the vehicle computer;
- Effective concealing from enemy reconnaissance by smoke grenade launchers.
- Preparation time less than 90 sec
- Leaving firing position time less than 45 sec
- Exchangeable modules can be used for firing a variety of unguided rockets
- The process of loading and rocket container changing is mechanized by using trans-loader vehicle with hydraulically powered crane

Rockets:

- Plamen A 128 mm 2×16 of 8.6 km range
- Plamen D 128 mm 2×16 of 16.6 km
- Oganj M-18 128 mm 2×12 of 22.5 km range
- Grad 122 mm 2×12 of 40 km range

60 MODULAR MLRS M18 "OGANJ-M"

M-18 „OGANJ-M" is self-propelled, armored, artillery fire support weapon intended to destroy dismounted infantry, light vehicles and fortifications, but also hardened static or moveable targets including bunkers, tanks and armored vehicles and small ships with variety of unguided rockets and guided missiles.

All weapon functions are fully automatic (with manual backup) and supported by modern orientation and navigation system based on high accuracy INS, GPS based north-finder, set of digital positioning sensor, and on board control electronics, ballistic computer with applicable BMS (battle management system) software providing for automatic levelling and weapon platform pointing in azimuth and elevation. Through digital radio weapon is interfaced with higher echelon C4I system and can operate under its control or independently. The ability to use variety of containers with different types of ammunition from short range (8,6 km) to long range (50 km) rockets or guided anti-tank or land attack missiles or their combination, gives commanders excellent combat flexibility and effectiveness.

Transition time from stopping to firing is less than 150 sec and time for leaving firing position is less than 120 sec.

Containers are loaded on the launcher by appropriate logistic vehicle with a hydraulic crane. The following containers exchangeable containers can be used:

UNGUIDED/COURSE CORRECTION ROCKETS:

- Plamen A/D 128 mm 2×16 of 8.5-12.7 km range
- M-18 128 mm 2×16 of 20.6 km range
- M-19 128 mm 2×16 of 40 km range
- M-20 ER128 mm 2×12 of 50 km range
- Grad 122 mm 2×12 of 20.4 km range
- Grad 2000 122 mm 2×12 of 40+ km range

GUIDED MISSILES:

- Alas up to 8 rounds, 30 km range, 10g warhead
- Kosava 1 up to 4 rounds, 45+ km range, 100 kg warhead

61 128 mm "OGANJ-M19" ROCKET

Caliber	128 mm
Length	2.800 mm
Mass	68 kg
Warhead	BGM18A2
Warhead type	HE steel ball
Warhead kill radius	up to 43 m
Warhead mass	17.5 kg
Temperature range	- 30°C to +50°C
Maximum range	40 km
Fuze types	- UTU, M12 superquick fuze with delay action I - UB, M18 proximity fuze
Propellant type	composite

62 128 mm "OGANJ-M20" ROCKET

Caliber	128 mm
Length	3.600 mm
Mass	82 kg
VVarhead	BGM18A2 / BGM20A1
Warhead mass	17.5 / 24.8 kg
Warhead type	HE steel ball / enhanced blast
Temperature range	- 30°C to +50°C
Warhead kill radius	43 / 50 m enhanced blast
Maximum range	50 / 45 km
Precision at target (CEP)	<0.5%
Fuze	Proximity fuze with impact action
Propellant type	Composite

63 122 mm "G2000" ROCKET

Caliber	122 mm
Length	2.875 mm
Total mass	69 kg
Mass of warhead with fuze	19,1 kg
Charge mass	20,15 kg
Motor total impulse	62.250 Ns
Temperature range of use	- 30° to + 50°C
Elevation	55°
Range	40+ km
Fuze - upper impact mechanical with point detonating and delay action	MRV-U

64 128mm M23 - TB ROCKET WITH THERMOBARIC WARHEAD

Caliber	128 mm
Length	3100 mm
Rocket mass	80 kg
Warhead weight	45 kg
Explosive type	Thermobaric explosive
Lethal radius	20 - 25 m
Operating temperature	-300 C to +500 C
Range	6 – 7 km
Firing Accuracy (CEP)	< 1.0% of the range
Fuse type	Impact
Rocket motorpropellant	Double base

65 128mm M20 - CC ARTILERY ROCKET WITH COURSE CORECTION

Caliber	128 mm
Length	3600 mm
Rocket mass	92 kg
Warhead weight	19 kg
Warhead type	HE prefragmented
Lethal radius	40 m
Operating temperature	-300 C to +500 C
Range	15 - 50 km
Firing Accuracy (CEP)	< 0.5% of the range
Fuse type	Proximity/Impact
Rocket motorpropellant	Composite

66 128mm M23 – AT/RM ARTILERY ROCKET WITH ANTI TANK MINES FOR REMOTE MINING

Caliber	128 mm
Length	3600 mm
Rocket mass	92 kg
Warhead weight	45 kg
Explosive type	8 anti-tank mines
Operating temperature	-300 C to +500 C
Range	6 – 7 km
Fuse type	Magnetic/Contact on each mine
Rocket motorpropellant	Composite
Fuse type	Proximity/Impact
Rocket motorpropellant	Composite

67 ALAS ADVANCED LIGHT ATTACK SYSTEM

ALAS is a long-range , non line of sight, multipurpose guided missile system. It was developed to defeat various surface static or movable targets such as tanks, armored vehicles, fortifications, command posts, small ships e.t.c.. It can be deployed on various platforms including modular Artillery launchers, tactical vehicles, helicopters, small ships .The guidance system is based on mid course inertial guidance with terminal guidance by optronic seeker , with the missile connected to the launcher by a fiber-optic cable and back up radio link. The seeker has TV CCD or IR sensor installed on a gyro stabilized frame and video processing electronics connected to the missiles autopilot. Alas has small radar and infrared signatures and can take various flight profiles with complex trajectory using terrain to avoid detection and approach the target from most suitable direction. Long range is achieved by turbojet propulsion instead of solid fuel rocket motor.

Total body length	2.723 m
Body diameter (caliber)	0.175 m
Wingspan	1.638 m
Launching weight	73.10 kg
Warhead	10 kg (HE prefrag or HEAT 1.400+mm RHA penetration)
Sustainer	TMM-040/RCTurbojet engine
Booster	solid propellant booster engine
Cruising speed	120-150 m/s
Max flight altitude	2.000 m
Max range	25 km
Min range	3 km
Max. axial load	10 g
Max. load limit	4 g
Mid-course guidance	INS/GPS
Terminal guidance	TV CCD/IIR
Auto tracking	correlation tracking algorithm

68 NOVA - MEDIUM RANGE MULTI PURPOSE MISSILE SYSTEM

NOVA is a light multipurpose missile system. The NOVA missile system was developed primarily to defeat tanks, armored vehicles, fortifications, command posts, low-flying helicopters and small boats. It can be deployed on various suitable platform, including helicopters, armored or tactical vehicles, small ships and infantry. The guidance system is based on video/infrared homing head, with the missile connected to the launcher by a radio link. The missile flies on the ballistic trajectory with mid-course INS guidance to the target area. Using a radio link, the image is transmitted from the homing head to the ground control station, where the operator selects and locks on the target. Thereafter, the missile tracks and hits the target on its own.

Both top-attack and direct-attack modes are available. Systems consist of missile in container, launching unit, ground control station with radio link.

TECHNICAL DATA	
Max. range	>7 km
Min. range	0.5 km
Weight (missile)	26 kg
Weight (with container)	35 kg
Dimension (with container)	300 × 300 × 1.400 mm
Diameter of missile	145 mm
Warhead	145 mm HEAT 6.4 kg, 1.000+mm (RHA - Rolled Homogenous Armor after ERA) or 120 mm HEAT 5.8 kg, 800+mm RHA HE prefragmented with proximity fuse 7.0 kg
Guidance	Mid-course INS Terminal Guidance HH
Seeker type	Un-cooled IIR or TV
Target tracking	Via missile: LBL from 0.5 to 5 km LAL via radio link 0.5 to 6 km

69 TAMNAVA MULTIPLE LAUNCH ROCKET SYSTEM 122/262 mm

The 122/262 mm MLRS is designed as a modular long range artillery system which can launch 122 mm and 262 mm rockets from containers accordingly.

Tamnava MLRS is a completely automated weapon equipped with the GPS and INS that can perform a preset firing mission with full autonomy or connected with battery fire control system.

The rockets are transported and fired from disposable launch containers. 4×24 rounds 122 mm container (2 on the launch platform and 2 on the vehicle platform) or 2×6 262mm rocket containers and 2×24 122mm rocket containers can be carried simultaneously . The containers are (un)loaded with a hydraulic crane mounted on the platform behind crew cabin.

Various types of rockets are available in both calibers with different warheads, fuses with or without guidance/course correction system.

TECHNICAL CHARACTERISTICS	
Range	262 mm - 70/90(guided) km and 122 mm - 40 km
Launching device	Disposable launch container
Number of launch container	4 launch container 122 mm or 2 launch container 122 mm + 2 launch container 262 mm
Number of tubes per launch container	6 (262 mm), 24 (122 mm)

70 262mm ORKAN 2 ARTILLERY ROCKET

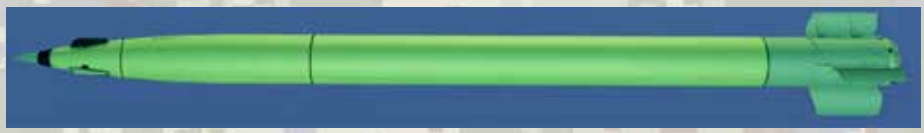

ORKAN 2 is 262 mm fin stabilized, tube launched artillery rocket intended for use from the M87 ORKAN MLRS or Tamnava system. ORKAN 2 is designed to achieve maximum range of 90 km with high precision, using the course correction system.

Main use for ORKAN 2 is to provide long range fire support to operational size units and to engage various of targets, ranging from troop concentrations, command posts, grouped armored vehicles, tanks, hardened shelters, etc. It can also provide for accurate long range counter-battery fire.

ORKAN 2 can be configured with different warhead types: high-explosive pre-fragmented warhead, high explosive penetration, etc.

TECHNICAL CHARACTERISTICS	
Range	90 km
Accuracy (CEP)	< 15 m
Operating temperature	- 30 ^{0}C to +50 ^{0}C
Length	5267 mm
Caliber	262 mm
Rocket mass	518 kg
Mass of warhead (HE)	100 kg
Explosive type	Thermobaric or EBT
Fuse type	Impact or proximity
Rocket motor propellant	composite
Propellant mass	235 kg
Rocket motor propellant	composite
Propellant mass	235 kg

SUMADIJA MODULAR SELF-PROPELLED LONG-RANGE MULTIPLE LAUNCH WEAPON

SUMADIJA is a weapon intended to defeat important enemy point and area targets, and time critical targets (owing to the critical time response) such as ground-to-ground rocket systems, air defense systems, airports, heliports, concentration areas, military bases, training camps, logistics centers, harbors, concentrated troops, important military infrastructure facilities, command centers, communication centers etc.

The weapon is equipped with navigation and fire control system and integrated in higher echelon C4I system. Weapon features a short transition time from marching to combat position, and back.

The system is capable of launching four rockets against one or more targets at up to 285 km, with the circular error probability (CEP) of less than 50 m in the INS/GPS guidance mode, or of about 150 m in the INS mode (this applies to rockets Jerina 1). Loading and reloading of containers is done by means of a special utility vehicle equipped with a lifting device. The utility vehicle is capable of transporting two containers each with two 400 mm caliber rockets, or two containers each with12 262 mm rockets.

TECHNICAL CHARACTERISTICS	
Range	285 km (400 mm caliber, rocket Jerina 1) 70 km (262 mm caliber, rocket Jerina 2)
Caliber	400 mm 262 mm
Launch device	Disposable containers
No. of containers /launch modules	2
No. of barrels, rockets in one container	2 (rocket Jerina 1), a total of 4 rockets 6 (rocket Jerina 2), a total of 12 rockets

MORTARS

60 mm M06 COMMANDO

60 mm M57

60 mm M06

Serbian mortars has proven its reliability and effectiveness in various conflicts around world under harshest climate conditions and in the hands of not perfectly trained crews. they are design under latest standard and produced from high grade material under latest production technology.

Mortars are a light weight weapons for infantry close support, designed for annihilation of manpower, destroying of firing points during artillery preparation of attack and for defense of a supported unit. There are particularly effective on intersected and hilly terrains where the enemy may be hidden by a rear scope. The mortars can effectively open breaches in wire barriers or mine fields, demolishing lighter fortifications and remove top soil covers over heavy bunkers. The mortars are also well suited for combat against mechanized units, by destroying their infantry. There are also suitable for making of smoke screen and for target illumination at night.

81 mm M69BK / 82 mm M69A

120 mm M74

MORTARS TECHNICAL CHARACTERISTICS	60mm M06 COMMANDO	60mm M06	60mm M57	81mm M69BK	82mmM69A	120mmM74
Caliber (mm)	60,75	60,75	60,75	81,4	82,14	120
Lenght of barrel with breach piece (mm)	780	1366	725	1324	1374	1692
Mass of weapon in traveling posit. (kg)	9	30	24,5	52	52	219
Mass of weapon in combat posit. (kg)	7,6	23,5	18,5	45	45	120
Elevation (°)	-5 to +8	+45 to +85	+45 to +85	+45 to +85	+45 to +85	+45 to +85
Horizontal field of action: - without shifting of bipo (°) - with shifting of bipod (°)	+3 360	+3 360	+3 360	+3 360	+3 360	+3 360
Rate of firing (rds/min)	20 to 25	20 to 25	20 to 25	20 to 25	20 to 25	12
Ammunition	HE M73	HE M90	M73	HE M72/74	HE M86	LTF M62P3
Maximum range (m)	1600	5200	2537	4943	6050	6440
Minimum range(m)	85	120	74	88	84	266
Maximum barrel pressure (bar)	250	650	422	610	630	835
Sighting device	Mechanical	NSB-3	NSB-1/NSB-3	NSB-3	NSB-3	NSB-4
Numbers of operaters	2	3	3(4)	4	4	1+4
Packaging (pieces per box)	4	1	2	1	2	1
Dimension of box (mm)	1110x485x350	1670x500x380	1110x485x350	1430x630x330	1480x630x330	2110x1380x840
Weight of box (kg)	22	30	22	32	32	135
Brutto / Netto (kg)	58/36	60/30	71/49	84/52	84/52	355/219

MORTARS TECHNICAL CHARACTERISTICS	60mm M06 COMMANDO	60mm M06	60mm M57	81mm M69BK	82mmM69A	120mmM74
Caliber (mm)	60,75	60,75	60,75	81,4	82,14	120
Lenght of barrel with breach piece (mm)	780	1366	725	1324	1374	1692
Mass of weapon in traveling posit. (kg)	9	30	24,5	52	52	219
Mass of weapon in combat posit. (kg)	7,6	23,5	18,5	45	45	120
Elevation (°)	-5 to +8	+45 to +85	+45 to +85	+45 to +85	+45 to +85	+45 to +85
Horizontal field of action: - without shifting of bipo (°) - with shifting of bipod (°)	+3 360	+3 360	+3 360	+3 360	+3 360	+3 360
Rate of firing (rds/min)	20 to 25	20 to 25	20 to 25	20 to 25	20 to 25	12
Ammunition	HE M73	HE M90	M73	HE M72/74	HE M86	LTF M62P3
Maximum range (m)	1600	5200	2537	4943	6050	6440
Minimum range(m)	85	120	74	88	84	266
Maximum barrel pressure (bar)	250	650	422	610	630	835
Sighting device	Mechanical	NSB-3	NSB-1/NSB-3	NSB-3	NSB-3	NSB-4
Numbers of operaters	2	3	3(4)	4	4	1+4
Packaging (pieces per box)	4	1	2	1	2	1
Dimension of box (mm)	1110x485x350	1670x500x380	1110x485x350	1430x630x330	1480x630x330	2110x1380x840
Weight of box (kg)	22	30	22	32	32	135
Brutto / Netto (kg)	58/36	60/30	71/49	84/52	84/52	355/219

73 MORTAR AMMUNITION AND ARTILLERY ROCKETS

During its decades-long existence Krušik has been predominatly engaged in the production of items from mortar and rocket program which result in gaining a reputation in numerous market worldwide. Following the demands of the market, special attention has been paid to development activities and improvement of technological processes. In the previous period the following technologies have been developed and modernized:

- cold rotary rolling technology, production of boxer primers by wet technology, modernization of line for casting explosive, use of CNC machines etc.

By applying the latest technological solutions the following items are succesfully produces:

- production of unguided artillery rocket projectiles of 107 mm caliber (range 8,5 km and 11,5 km), 122 mm (range 20 km and 40 km), 128 mm (range 22 km, 40 km and 50 km), production of unguided aircraft rocket projectiles of 57 mm, 80 mm and 128 mm caliber, production of all families of mortar ammunition (HE, smoke, iiluminating and ammunition for the drone) of standard and extended range of 60mm, 81/82 mm and 120 mm caliber, production of the latest electronic fuzes for completion of mortar shells and rockets, production of various types of warheads (blasting, with steel balls, thermobaric, etc), production of tandem-cumulative warheads with the penetration of over 750mm behind ERA, production of various types of initial items including primers for shooting ammunition, production of hand grenades and various types of air bombs.

FIRE CONTROL SYSTEM FOR MORTARS

Fire control system for mortars provide faster deployment of 120mm and 82mm mortars, require less preparation time and make handling easier. The fire control system consists of:

- Optoelectronic system or drone are used for more efficient and reliable determination of target position
- digital device for directing mortars and determining their positions based on inertial sensors
- UPARS (Universal Movement Artillery Station) software application that enables planning, receiving and processing data (calculates basic shooting elements, corrected shooting elements) necessary for the execution of the mortar fire process.

TEHNICAL CHARACTERISTICS:

Observation device:

- eye-safe laser rangefinder with range up to 7km
- thermal imaging camera with uncooled detector, resolution 640x480 pixels, maximum detection distance of a tank-sized target in a narrow field of view up to 5km

Digitalized device for directing:

- accuracy of determining the position (X Y Z) up to 5m
- accuracy of determining heading: 0.2° RMS

75 ARTILLERY ELECTRONIC GONIOMETER - UPAOS

UPAOS is an optoelectronic device used for Artillery fire correction as well as general observation and positional awareness. It provides the user with positional data for both himself and his chosen target, using a built in laser rangefinder, personal GPS and a digital compass. The device is equipped with a daytime camera and a thermal camera in order to ensure complete day/night usability. The unit is designed to perform under harsh environmental conditions, defined by military standards.

TECHNICAL CHARACTERISTICS	
Laser type	Eye-safe
Laser wavelength	1.540 nm
Laser energy	≤ 8 mJ or ≤ 15 mJ
Laser beam divergence	≤ 1 mrad
Distance measuring range	60-10.000 m
Distance measuring accuracy	± 5 m
Measured distance display	for 2 targets
Measured distance frequency	≥ 6 measuring/min
Data transfer	RS 232
Daytime video camera	12×
Ocular with OLED display magnification	10×
Display	Digital TFT LCD, 3.5´´
Thermal camera	DRI
Thermal camera detector type	Uncooled, Vox
Thermal camera resolution	800×600 pixel
Thermal camera digital zoom	2×, 4×, 8×
Thermal camera optical zoom	1-8×
Digital magnetic compass	North accuracy 0,45° (8 mils)
Compass measuring frequency	15 measuring/s
GPS position accuracy	CEP50
Horizontal/Vertical accuracy	SPS ≤ 5 m, SBAS ≤ 5 m
Angle measuring accuracy	≤ 1 mils
Horizontal angle measuring range	range 0-6.400 mils
Vertical angle measuring range	± 500 mils

FORWARD OBSERVATION UNIT FOU-3

FOU-3 is an optoelectronic device used for Artillery fire correction as well as general observation and positional awareness. It provides the user with positional data for both himself and his chosen target, using a built in laser rangefinder, personal GPS and a digital compass. The device is equipped with a daytime camera and a thermal camera in order to ensure complete day/night usability. The unit is designed to perform under harsh environmental conditions, as defined by military standards. Compared to its previous version (FOU-2), this device delivers an all-round better performance with higher customizability.

TECHNICAL CHARACTERISTICS	
Laser type	Eye-safe or Nd:Yag
Laser wavelength	1.540 nm or 1.064 nm
Laser energy	≤ 8 mJ or ≤ 15 mJ
Laser beam divergence	≤ 1 mrad
Distance measuring range	50-20.000 m
Distance measuring accuracy	± 2 m
Measured distance display	for 2 targets
Measured distance frequency	≥ 6 measuring/min
Data transfer	RS 232
Daytime video camera	1/1.8, 16:9 CMOS
Daytime channel magnification	12×
Display	Digital TFT LCD, 3.5˝
Thermal camera	DRI
Thermal camera detector type	Uncooled, Vox
Thermal camera resolution	640×512 pixel
Thermal camera digital zoom	2×, 4×, 8×
Diopter adjustment	± 5 dptr
Digital magnetic compass	North accuracy 0,45° (8 mils)
Compass measuring frequency	15 measuring/s
GPS position accuracy	CEP50
Horizontal/Vertical accuracy	SPS ≤ 5 m, SBAS ≤ 5 m
Angle measuring accuracy	≤ 1 mils
Horizontal angle measuring range	0-6.400 mils
Vertical angle measuring range	± 500 mils

77 MODERNIZED GBAD SYSTEM "KUB-M2"

Medium range mobile Ground-based Air Defense (GBAD) system "KUB-M2" is designed for the escort and protection of armored and mechanized units as well as defense of important facilities and installation against aerial attacks. This system is efficient against drones, combat UAVs, combat helicopters, cruise missiles, low-flying aircraft, and larger radar contrast targets on water in all-weather day and night.

Main system elements are mounted on high mobility armored trucked chassis giving them possibility follow mechanized units on the hard terrain. System is composed of battalion command post, long-range search and track radar (200+km) and 3-5 firing units/batteries. Battalion command post with communication syb-system and command console providing integrated air picture forming and its exchanging with subordinate, adjacent and higher units. Each firing unit/battery is equipped with its own search track and missile guidance radars with new generation digital receivers as well as thermal long range HD imager for concealed operation. Missiles are very advanced with combined propulsion with solid rocket motor buster and ram-jet solid motor sustainer providing for very high speed (Mach 3).Missile is equipped with semi-active radar homing head which can operate in any weather condition. Onboard guidance electronics providing for optimal missile trajectory in order to attack target from above and high power blast fragmentation warhead (56kg).Latest upgrade of radar systems as well as radar homing head enables system to attack also slow flying UAVs and to operate in hard ECM conditions and to increase survivability when attack with anti radiation missiles.

Through system upgrades, C2I modern system is implemented and improved capability of connection with other command systems, enabled passive day and night operation, and increased reliability of the system through replacement of obsolete components with latest technological new ones.

HMADS - HYBRID MOBILE AIR DEFENCE SYSTEM

The HMADS is a modern hybrid system primary intended for air defense of armored and mechanized units. As main AD effectors system combines two 5km range powerful L/70 40mm auto cannons and four 15km range AD missiles, turret mounted on tank chassis.

Automatic cannons equipped with high capacity magazines are using proximity fused ammunition against fixed/rotor wing aircraft as well as programmable air-burst ammunition which provides very high lethality against different small UAV`s and drones in a very cost efficient manner. The guns are also extremely effective against ground targets such as light armored vehicles and dismounted infantry with appropriate types of ammunition.

For engagement of high value aerial targets at longer distances and higher altitude, system is armed with for AD missiles (2 x RLN - IR and 2 x RLN - RF).

Fire control system as a primary sighting device use optoelectronic system with gen III cooled thermal imager, laser range finder and day camera coupled with ballistic computer. Guidance Radar/illuminator for RF guided missile is installed at the front part of the turret.

The modern GBAD radar with IFF on the vehicle is capable to provide precise target detection and comprehensive situational awareness of all types of air targets – from low, slow and small (LSS) targets to helicopter, combat aircraft and missiles, general air targets and missiles. Radar maximum operational range is up to 75km, and commercial drones could be detected and tracked at up to 5 km range. Also radar could be used for CRAM function, transferring data about incoming missiles (including estimated launching and impact point) through encrypted radio link to higher echelon for early warning of the troop as well as for counter battery actions by other effectors.

Armored turret is installed on proven MBT chassis which is characterized by excellent mobility on the most complex terrain and high level of ballistic protection.

79 RLN-TK

TECHNICAL CHARACTERISTICS	
Max 0perational range	15 km
Max target altitude	8 km
Length	2850 mm
Caliber	170 mm
Rocket mass	110 kg
Warhead mass	10 kg
Fuse	Contact/proximity
Homing head	IR FPA
Rocket motor	Two stage solid rocket

RLN-TK is a two stage short range air defense missile design primarily for integration into self-propelled air defense missile systems for close protection of mechanized units and important facilities. Main targets for RLN-TK are low altitude flying attack helicopters, airplanes, cruise missiles as well as tactical MALE armed UAVs. It can be used in fully passive mode, with opto-electronic sighting system.

Missile is highly maneuverable for engaging fast moving targets. Imaging LWIR homing head have increased probability of detecting target at longer ranges, as well as high resistance to passive and active jamming.

80 RLN-RF

RLN-RF is a two stage short range air defense missile design primarily for integration into self-propelled air defense missile systems for close protection of mechanized units and important facilities. Main targets for RLN-RF are low altitude flying attack helicopters, airplanes, cruise missiles as well as tactical MALE armed UAVs. It can be used in active mode using the tracking radar, as well as in semi-passive mode using electro-optical tracking and directing by the radar illuminator. Missile is highly maneuverable for engaging of fast moving targets.

TECHNICAL CHARACTERISTICS	
Max 0perational range	15 km
Max target altitude	8 km
Length	3050 mm
Caliber	170 mm
Rocket mass	110 kg
Warhead mass	10 kg
Fuse	Radar proximity and impact fuze
Homing head	Semi-active radar homing
Rocket motor	Two stage solid rocket

PASARS M16 HYBRID GUN/MISSILE AIR-DEFENCE SYSTEM

Hybrid self-propelled armored AD system PASARS 16 with 40 mm auto cannon and short range AD missiles, is designed for the escort and protection of armored and mechanized units as well as defense or important facilities and installation against aerial attacks. The system is efficient against drones, unmanned aerial vehicles, combat helicopters, cursing missiles, low-flying aircrafts and in engagements of targets on the ground and water. System can be also armed with 2T5 anti tank missiles 5+ km range.




TECHNICAL SPECIFICATION	
Vehicle	FAP 2228, 6×6
Gun	L/70 40 mm automatic
Efficient target range	up to 5 km with the gun, up to 15 km with missiles for aerial targets, 5+ km for armored ground targets with ATM 2T5
Rate of fire	300 rounds/min
Available ammunition types	Mix of HE, proximity fused and airburst ammunition
Ammunition capacity	44+2 rounds ready to fire in the magazine + 96 rounds stowed on the vehicle, AD missile configuration 2×Mistral / 2×RLN-IC / 2×Strela 2MA + 2×Igla AD/AT configuration 2×Strela 2MA + 2×I 2T5 ATM
Elevation range	-3° to 90°
Traverse range	n × 360°
Electrohydraulic servo drive	Traverse speed 90 ° / sec
	Elevation speed 60 ° / sec
Air target speed	up to 500 m/s
Fire-control system	with Gen III thermal sight and LRF integrated with battery level FCS
Automatic levelling with four hydraulically powered spades	
Power supply sub-system consist of modern diesel electric generator and electric energy distribution system	

PASARS NG (V4) HYBRID GUN/MISSILE AIR-DEFENCE SYSTEM

Latest member of PASARS family contains all elements of previous version with significant improvement of operational capabilities. All terrain vehicle with armored chassis preserves 40 mm automatic cannon, advance thermal imaging sight and modern FCS capable to efficiently engage various aerial as well as targets on the ground and water.

Vehicle is also equipped with 4 radar panels in an orthogonal configuration, based on Active Electronically Scanned Array (AESA) antennas which provides 360^0 radar coverage. Detection range for fighter aircraft is 35km and for nano drone 5+km.

Radar installation extend PASARS combat capabilities, providing accurate aerial data target and elements for turret azimuth/elevation orientation and enable fully autonomous mode of operation, in combat situation when communication with battery level radar is interrupted or battery radar destroyed.

System is also equipped with EW anti drone system for „soft kill" capability with directional antennas set covering various jamming frequencies slaved to the main gun and coupled with search radars for target location and jammer orientation.

PASARS NG is equipped with powerful weapon configuration consisting of 40mm auto canon, six short range AD missiles arranged in two separately launchers with independent elevation drive attached to both turrets sides (2 x MISTRAL, 2 x Igla or similar MANPADS, 2 x Strela 2MA low cost anti drone missile). Instead of Igla launchers 2 x 2T5 ATGM missiles launchers can be attached.

PASARS NG can also be used as command vehicle to direct other attached previous generation PASARS systems.

83 STRELA 2MA SHORT RANGE AD MISSILE

Strela 2MA is designed as cost/performance efficient short range AD missile against different kinds of aerial threats especially UAV´s and drones. The main improvements compared to previous similar systems are new seeker and proximity fuse.

New seeker is based on SWIR detector using InGaAs technology. This device provides high-quantum efficiency, high responsivity and low noise. SWIR detector is high sensitivity device within a wide range of light levels from daylight to starlight and near visible IR, and has the advantage of high transmission in problematic atmospheric conditions such as haze, fog and dust. New seeker provides high probability of detection at long ranges for various target with decreased thermal signature (such as battery powered drones).

New proximity fuse is an electronic assembly of the Strela 2MA missile intended to detect near airborne target by a set of 4 laser sensors and send an electric signal to the warheads initiating circuit, 2m from the target. Proximity fuse compared with impact fuse provides higher lethality and probability of target destruction especially against small size target such as UAV's and drones. For enhanced efficiency on bigger targets such as helicopters and airplanes proximity function can be manually disabled before launching.

TECHNICAL SPECIFICATION	
Operational range (km)	10+
Flight altitude (km)	5
Length (mm)	2950
Caliber (mm)	120
Missile mass (kg)	65
Warhead mass (kg)	3
Fuze	Contact/proximity fuzes
Homing head	Dual-mode passive photo-contrast / IR seeker
Rocket engines	Composite solid fuel

84

Thermal sight and TARGET INDICATOR FOR MAN-PORTABLE AIR DEFENSE SYSTEM MISSILE SYSTEMS

System is intended for day/night target acquisition, receiving and processing of target data obtained from surveillance air defense radar. Digital data processing includes correction of received target data depending on the radio signal delay from the radar, prediction by linear tracking, calculation of the target range and azimuth.

It is integrated on the man-portable infrared homing surface-to-air missile system. It is composed of thermal camera, global navigation satellite system, electronic compass, digital radio device and electronic ocular.

PERFORMANCES	
Target detection range	10 km
Target data refresh rate	< 1s
Thermal imager resolution	640×512 pixel
Operational environment	-25°C to +55°C
Weight	2 kg (3.34 kg with mounting equipment)
Working autonomy	>10 hours
Electronic ocular resolution	800×600 pixel
Sight angle	33.9° × 28.5°
Radio device working frequency	433MHz
GNSS	GPS, GLONASS, Galileo

85 AIR DEFENCE QUADRIPLE LAUNCHER MTU-4M

MTU-4M is remotely controlled weapon station intended for day/night short-range air defense and close support of maneuvering combat units. It is effective against various air borne threats from high value targets to the latest generation small UAVs and drones. It is equipped with a thermal imager sight, global navigation satellite system, inclinometer, digital compass as well as system for target acquisition, receiving and processing of target data obtained from battery command post equipped with surveillance air defense radar. Digital data processing includes correction of received target data depending on the radio signal delay from the radar, prediction by linear tracking, calculation of the distance to the target and target azimuth.

System is designed to launch a Igla SAM (alternatively other SHORAD/MANPADS missile) and Serbian made STRELA 2MA missiles (with modernized seeker and proximity fuse) making it very effective against small aerial targets such as drones and UAVs.

It is integrated on the aft deck of off-road NTV 4x4 and fast and precise azimuth and elevation orientation is provided with two electrical servo drives.

Launcher is also equipped with a heavy machine gun (12,7mm) as a secondary weapon for close protection and several types of drone/UAV`s engagement. All weapons firing are performed with a usage of integrated fire control system (FCS).

Optoelectronic sighting system with laser range finder and thermal imager is the main component of the FCS and enables target detection and video tracking, after launcher initial orientation, based on external guidance from radar. Launcher also incorporate large nitrogen tank for seeker cooling as well as external power supply for missiles which enable significantly extended time for target acquisition and sighting compared to capacity of original nitrogen tank and installed battery on MANPADS. System could be equipped with IFF Interrogator. Driver gunner and commander, are sitting in the vehicle. Commander operates target acquisition system with its own tablet monitor and digital radio device, while gunner remotely controls thermal imaging sight and missile launching mechanism.

The number of missiles on the launcher is 4 (four). Additional 4-6 rounds are stowed in the vehicle.

86 MOBILE CVOJ M11 SYSTEM

CVOJ M11 is C2 air surveillance system. It is cost-effective and flexible solution for radar data processing, visualisation and dissemination. System provide radar video acquisition from analog signals, automated target detection and tracking and radar data visualization.

System enables integration of variety of older generation legacy surveillance and AD radars with analog output in the modern digital radar network. Digital output radar data enabling data fusion and RAP (recognized air picture) creating at level of higher echelon C2/C4I system. CVOJ is also equipped with ground to air communications and working station for fighter controller. Connection with radar is established through 500m long fibber optic cable with completely remote control of the radar post significantly improving crew protection and survivability in case of attack with different type of airborne weapons (AGMs, unguided and guided bombs) on radar antenna system and shelter.

MAIN MODULES	
Acquisition & Control	Samples analog video signals and antenna azimuth signal from primary and secondary radar and converts into digital radar video format.
Extractor	Analyses digitized primary radar video and generates plots (up to 2.000 per antenna turn).
Tracker	Generates tracks (up to 1.000), which represent actual targets whose presence is confirmed with a sequence of plots from consecutive radar scans.
Display	- raw radar picture in plan position indicator format, - plots & tracks, - overlay graphics including maps, azimuth and range markers, code grids, air-traffic corridors, navigation aids, zones, etc.
Communication	- continuous real-time plot data reporting to superior control center. - continuous real-time track data exchange with superior control center and peer radars.

87 MODERNIZED RADAR GIRAFFE M85

Modernized radar GIRAFFE is impulse Doppler radar designed for detection and automatic tracking of low flying targets and to provide target data towards PASARS short range air defense system using digital radio devices. Automatic hydraulic vehicle leveling system and applied modern techniques of digital radar signal processing enable high maneuverability, mobility and short response time. System consists of an C band radar transmitter, a new two-person control panel with a software radar receiver (SRR), a remote workstation, a telecommunication system, an electric generator and an alternative power supply, integrated on the modernized FAP 2026 vehicle provides cross country mobility. The low-noise amplifier, additionally built into the receiving branch of the radar, increases the sensitivity of the receiver by almost 50 dB providing capability to detected and track the latest generation drones and UAVs.

88 ORAO 2.0 J-22M MODERNIZED GROUND ATTACK FIGHTER

Modernized J-22M is a twin engine transonic ground attack and close combat support aircraft with metal structure and high wing configuration designed for low altitude high speed deep penetration battlefield interdiction missions in highly contested airspace in complex weather conditions and at night. It has numerous design features to improve combat survivability including multiple command and control systems and various electronic self-protection systems.

The aircraft is equipped with the latest generation attack navigation system and avionics including optoelectronic sighting system with powerful third-generation thermal imaging camera and a laser rangefinder for precise determination of the target's distance, a ballistic computer and the most modern navigation system. This enables accurate weapon delivery for both unguided and guided weapons (cannon, unguided missiles and air bombs, IR and laser guided bombs and missiles). The aircraft's most efficient weapon is the Serbian designed VRVZ/Kosava stand-off guided missile family with LOAL capability and 20/50+km range.

Aircraft is also equipped with self-protection system which combines RWR and LWR sensors, flare dispensers and active radar jammer/interference pod.).

CHARACTERISTICS	
Length	14,90 m
Wingspan	9,30 m
Height	4,52 m
MTOW	11.080 kg
Max. speed	1.130 km
Range	550 km
Powerplant	2×Rolls Royce Viper Mk 633 47 with 2250 daN AB thrust
Max. payload	2.800 kg
Guns	2×GSh-23 automatic canon 23 mm

LASTA/ LASTA TP TRAINER AIRCRAFT

LASTA is a modern, piston-engine driven (Lycoming 320HP) and LASTA TP turbo prop engine driven (Rolls Royce M250-B17F 450 HP) , full-aerobatic military trainer aircraft, with tandem seating arrangement, two wing hardpoints and low acquisition and operation cost. Intended for elementary and basic flight training, but also for training in use of classical unguided weapons and early stages of advanced training, it replaces two or even three training aircrafts during a training course. Used properly, within an intense and integrated course, it delivers high quality training, without the additional cost and time needed for transition training, wrong learning and relearning, therefore achieving massive cost saving.

Completely digital cockpit with analog backup instruments and high level of redundancy features two screen displays (PFD and MFD) and engine and fuel monitoring instrument for each seat, with individual hands-on throttle and stick for both the student and the instructor.

Bubble canopy allows unimpeded field of view, hemispherical, forward, rear and above, but also the unimpeded vision downwards, critical for attack training and low level navigation, with 2° reserve visibility of approaching runway from the front seat.

LASTA's high level of equipment and performance (especially rolling rate), coupled with the capability of using 12,7 gun pods, 57 mm rocket launcher, 100 kg bombs or practice bombs and practice weapons (weapons training, CAS/COIN, air patrol) and low cost of acquisition and operation make Lasta a unique aircraft in its category.

LASTA TP	
Maximum speed	400-420 km/h
Stall speed	<115 km/h
Cruise speed	380 km/h
Maximum rate of climb	13.5 m/s
Bank angle load factor	3.4 g
Flying height	7500 m
Maximum flight duration	+4 h
Maximum flying range	1.200 km
Landing length	265 m
Take-off length	575 m
Load factors	+6/-3 g

AIRCRAFT GUIDED MISSILES

A range of guided missiles provides attack aviation with possibilities to accurately hit and destroy various static targets - bunkers, bridges, harden shelters, command and communication posts, and also movable targets such as tanks, armored combat vehicles, small ships, etc. day or night, within or beyond visual range and beyond range of IR short range air defense systems.

VRVZ 200 and Kosava are "standoff" NLOS weapons with both LOBL and LOAL mode of operation providing for 30+ and 50+km range respectively with INS mid-course guidance (INS/radio link for Kosava) and terminal guidance with TV/IIR seekers .They are both equipped with 100+kg penetration/blast fragmentation warhead optimized to destroy hardened and deeply buried targets.

SALGR 128mm is high velocity laser guided missile range 29km, with 11kg dual purpose anti-tank/fragmentation warhead designed to defeat modern main battle tanks, armored combat vehicles as well as smaller bunkers.

VRVZ 24 is high velocity missile with SACLOS-RF guidance and with range of 15+ km range and equipped with powerful bunker buster 123 kg HE/penetration warhead designed to destroy hardened/deeply buried targets.

Missile	SALGR 128	VRVZ-24	VRVZ-200	Kosava K-3
Range	20+ km	15+ km	25+ km	50+ km
Weight	62 kg	257 kg	155 kg	454 kg
Guidance	SAL, INS mid-course	SACLOS RF	LOAL: TV/IIR homing, INS midcourse	LOAL: IIR homing, INS / radio link command midcourse
Warhead	11 kg HEAT/ frag	123 kg HE penetration	100 kg (shaped charge/blast)	320 kg HE penetration
Purpose	Against tanks, vehicles, command posts	Against fortifications and infrastructural targets	Against high value surface targets or ships	Against heavy fortification and infrastructural targets

91 FAB-250 PGB

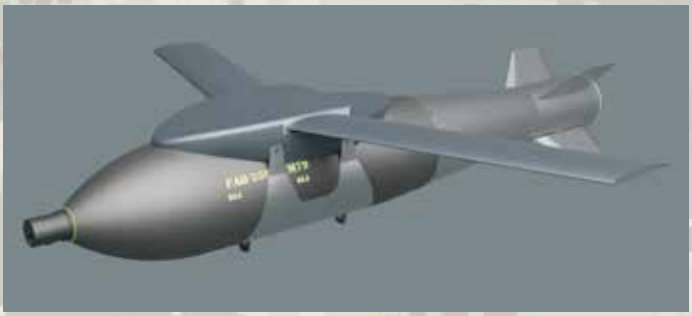

FAB-250 PGB consists of a general purpose low drag serbian made FAB-250 bomb, guidance tail section and range extention kit. Guidance is provided by integrated GNSS/INS guidance system which is communication with store managment systems on the aircraft. After release from the aircraft, wings of the guidance kit opens up providing great stand-off range enabling strikes on targets at ranges up to 80km. Because of its range and precision this guided weapon enables the attacking aircraft to stay out of range of the anti-aircraft systems.

TECHNICAL CHARACTERISTICS	
Release altitude	6-10km
Release velocity	600-1000km/h
CEP	≤15m
Max range	80km
Length	2600mm
Weight	290kg

PGB-128 PRECISION GLIDING BOMB

The PGB-128 (Precision Gliding Bomb) is small precision-guided glide bomb against the stationary and moving targets. It is equipped with high precision guidance system (GNSS & INS optionally improved by the semi-active laser seeker (SAL) or image-based navigation).It could be released from low, medium and high-speed aircraft as well as form UAVs due to small weight. Released form minimum altitude (2000m) it has range of 16km. Maximum release altitude is 7620m and corresponding maximum range is 60 km. The modular design of the weapon enables PGB-128 to accommodate different warhead types, such as blast fragmentation, anti-armor or thermo baric.

TECHNICAL SPECIFICATIONS	
Diameter	128 mm
Total weight	30 kg
Warhead weight	20 kg
Overall length	1.053 m
Wingspan lenght	1.488 m

93 HELICOPTER GUIDED WEAPONS

A range of guided missiles provides attack helicopters with possibilities to accurately destroy various static or movable surface targets, such as tanks, armored combat vehicles, bunkers, small ships, etc. in all weather conditions, within or beyond visual range. 2T5 is dedicated AT missile, range 5km, with SACLOS guidance through radio link and equipped with powerful tandem warhead (1000+ mm RHA). S8LGR is laser guided missile, range 8 km, based on S-8 KOM rocket fired from rocket pod equipped with dual purpose warhead to defeat various targets. ALAS and Spider missiles have possibility for mid course guidance for predetermined target position and terminal guidance through TV/IIR seekers link to helicopter via fiber optic cable and radio link, thus providing for non light of site movable target engagement while helicopter is hidden behind cover, which significantly improve its survivability.

Missile	S8LGR	ATGM 2T5	Spider	ALAS
Range	6 km	5 km	8 km	25 km
Weight	13.3 kg	26 kg	45 kg	73 kg
Guidance	SAL	RF SACLOS	LOAL: IIR homing, INS / radio link command midcourse	LOAL: IIR homing, INS / wire command midcourse
Caliber	80 mm	145 mm	145 mm	175 mm
Warhead	3.6 kg HEAT/frag Penetration: 400 mm	6 kg HEAT tandem, pen: 1.000 mm w. ERA	6 kg HEAT tandem, pen: 1.000 mm w. ERA	11 kg HE frag
Purpose	Anti-tank, against vehicles and command posts	Anti-tank	Anti-tank	Against high value targets

HELICOPTER UNGUIDED WEAPONS

HELICOPTER POD GH-12.7M with 12,7 mm machine-gun is intended for neutralizing ground targets (command posts, light armored vehicles, logistics trucks and enemy's personnel) as well as for fighting against specific air targets (helicopters, light airplanes, RPV-s and parachutists) at effective ranges of up to 1.500 m.

TECHNICAL DATA	
Mass of empty pod	86 kg
Mass of the pod with full combat load	11 kg
Caliber	12,7 mm
Effective firing range	1.500 m to 2.000 m
Max. rate of fire	700 round/min

MACHINE GUN M09 ON THE HELICOPTER SIDE DOOR - The 12.7mm machine gun M09 with appropriate carriage is intended for installation on the MI-17 helicopter side doors. The 12.7mm machine gun mounted on the helicopter side door is used to destroy ground targets (command posts, light armored vehicles, enemy troops etc.). It is particularly useful for own protection when landing, taking-off or during crew disembarkation in the combat area or their embarkation through the helicopter rear door.

On MI-17 helicopter there is a possibility to open simultaneous fire from the left and right doors. The effective range for ground targets is max. 2000 m. Action against air targets is also possible (against helicopters, light aircraft, UAVs, parachutists etc.).

TECHNICAL DATA	
Caliber	12,7 mm
Machine gun length	1.610 mm
Weight	25 kg
Effective range	1.500 to 2.000 m
Max. Range	6.000 m
Max. rate of fire	650 to 800 rds/min
Ammunition box capacity	150 rds
Power supply	28 ± 4 V

SEVEN ROUND ROCKET LAUNCHER L80-07 - Rocket launcher L80-07 is intended to destroy different types of ground targets. Due to combined HEAT and fragmentation effect could be effectively used against light armored vehicles, light fortified objects as well as enemy's personnel.

TECHNICAL DATA	
Caliber	80 mm
Missiles	7
Missile type	S8-KO and S8-KOM
Mass (empty)	55 kg
Mass (loaded)	138 kg
Operation temperature	-45 to +70 ºC
Range with S-8KOM missile	up to 8 km

95 MULTISENSOR RECONNAISSANCE PLATFORM (MIP-1)

Portable remotely operated surveillance platform MIP-1 is a multi sensor optoelectronic system for long range day and night surveillance/target data measurement, real time intelligence data gathering, directing of artillery fire, counter terrorist operations, sight protection.

BASIC SUBSYSTEMS ARE:

- Multi sensor optoelectronic block, consisted of color video day/night camera, thermal vision camera, laser rangefinder, digital magnetic compass and GNSS receiver;
- Remotely operated (pan/tilt) servo system;
- Operator-command post with display, applicable software and telecommunication subsystem.

The system provides automatic determination of own position and orientation, detection, recognition, identification, geo-location and tracking the targets in day and night conditions and low visibility conditions as well as digital map operation with automatic target data transmission to the higher commander (through attached digital radio)

System provide for remote operation from a safe location thus increasing reconnaissance crew survivability.

THE RANGES OF DETECTION/RECOGNITION/IDENTIFICATION ARE:

Tank: 9.3/5.8/3.8 km	TV camera
Tank: 7.7/2.6/1.3 km	Thermal vision camera
LRF (eye safe) range	up to 20 km

DAY-NIGHT OBSERVATION SIGHT DNOS

MAIN FEATURES :

- Thermal image infrared night camera channel
- Day camera channel
- High digital compass accuracy
- High GPS position accuracy
- Video output
- Digital data output RS 232

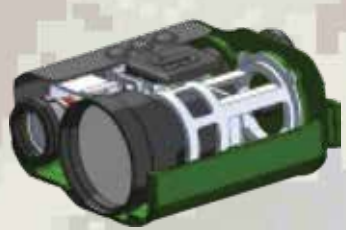

THERMAL CAMERA

- Detector type: Uncooled, Von Microbolometer
- Spectral range: 8-14 µm
- Resolution: 800×600 pixels
- Pixel size: 17µx17µ
- Field of view: 6,2°×5,0°
- Digital zoom: 2×, 4×, 8×
- Objective diameter: 90 mm

DAYTIME CAMERA

- Resolution: 800×600
- Optical zoom: Continuous from 1× up to 23×
- Field of view: 58°- 2,8°
- Minimum illumination: 0,001 Lux/F1,5

ADDITIONAL SPECIFICATIONS

- Operating temperature: -25°C to +55°C
- Li-ion battery: 3.000 mAh
- Power input: (external) 24 VDC
- Interface: RS 232
- Dimensions: 245×190×120

EYE-SAFE RANGEFINDER MODULE ES LRD-20/M

ES LRD-20/M is an eye-safe, long distance erbium glass laser rangefinder module. It measures distances up to 20 km and is designed to perform under demanding environmental conditions. Its rigid construction and high quality craftsmanship follows the highest of military standards.

TECHNICAL CHARACTERISTICS	
LASER RANGEFINDER	
Range	80 m to 20.000 m
Accuracy	± 5 m
Blocked range	80 m to 5.000 m
Targets	2+1 blocked
Wavelength	1540 nm
Energy	≤ 8 mJ
Beam divergence	≤ 1 mrad
Measuring frequency	One burst per minute, 20 pulse @ 1 Hz
Connection	RS 232 / RS 422
Chassis connector	Souriau 85107A12-10P50
Operating temperature	-30°C - +50°C
Power supply	20-30 VDC
Power consumption	< 2,5 A
RECTIFICATION SCOPE	
Optical zoom	1,5× – 4,5×
Field of view at 1000 m	22,3 m @1,5× 7,7 m @ 4,5×
Exit pupil	17 mm @1,5× 7 mm @ 4,5×
Eye relief	(4/102) mm
Click value	7mm @ 100 m
Adjustment range	1,7 m @ 100m
Weight	267 g
Length	268 mm

MULTIROLE FAST COMBAT BOAT

The Multirole Combat Boat is a high-performance craft designed for a wide range of police and internal security activities, including anti-terrorist, anti-guerilla and anti-piracy tasks, and for a number of military operations such as special forces` landing missions, transport of divers etc.

The boat displacement varies, depending on the tactical assignment, from 7.5 to 10. 5 tons, and can develop a speed of 40 to 45 knots.

The boat is made of marine grade aluminum. The hull with the stiffeners is a structure made of marine grade aluminum 5083, using TIG and MIG welding techniques.

Length overall	11.98 m
Length on waterline	10.05 m
Beam maximum	3.34 m
Beam on waterline	3 m
Static draft	0.7 m (sea version 1 m)
Height from keel	1.6 m
Displacement (dry weight/max)	6.500/ 10.500 Kg
Fuel capacity	900 l
Maximum speed	40-45 knots
Range - Top speed (hours/nautical miles)	5 h / 200 nm

SECTOR FOR MATERIEL RESOURCES
Ministry of Defence of Republic of Serbia

Nemanjina 15
11000 Belgrade
e-mail smr@mod.gov.rs
phone +381 11 3006183

2023.